TRI-POLE INDUCED MAGNET CARTRIDGE

YM-308IIX / YM-308IIE / YM-308II

PIEZO

www.hifiengine.com

YM-308IIX
YM-308IIE
YM-308II

Features

Newly developed tri-pole induced magnety type cartridge.

The tri-pole armature attached to the base of a cantilever is composed of three axes in the three directions. One of them fixes the cantilever and increases rigidity sufficiently, to avoid the split vibration of the vibration system. And, armatures in the three directions including this armature pick up stereo signals on both sides separately and transmit a reproduction signal to the electric conversion system securely while avoiding cross talk. This is the tri-pole induced magnet system (patent pending) unique to piezo-electricity. It provides outstandingly clear channel separation and high resolving power in addition to a static, solid and rich tone quality.

www.hifiengine.com

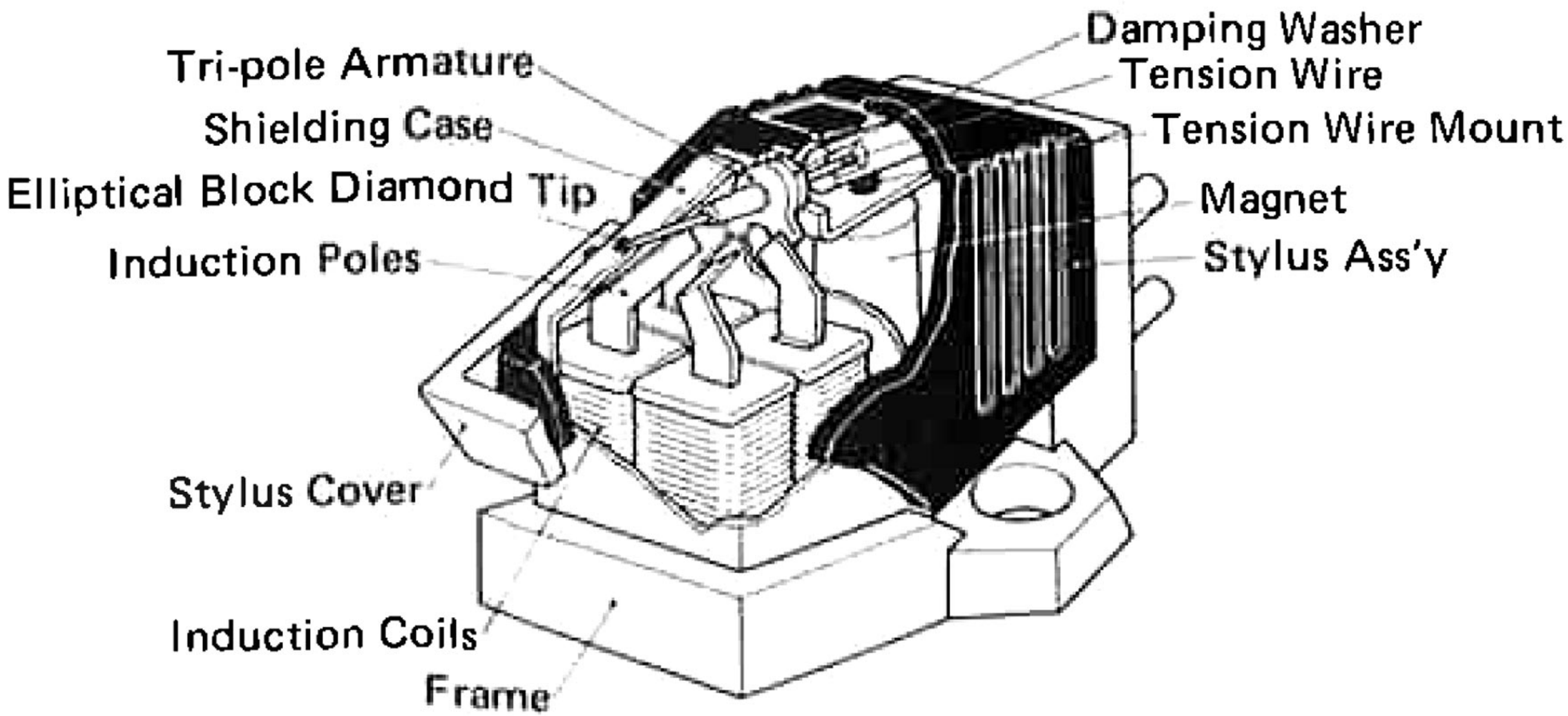

Fig.1

www.hifiengine.com

1. Removing the cartridge

First, pull the stylus ass'y upward from the cartridge attached to the base. Then loosen the screws with an attached screw-driver and remove the cartridge from the base together with the screws (see Fig.2)

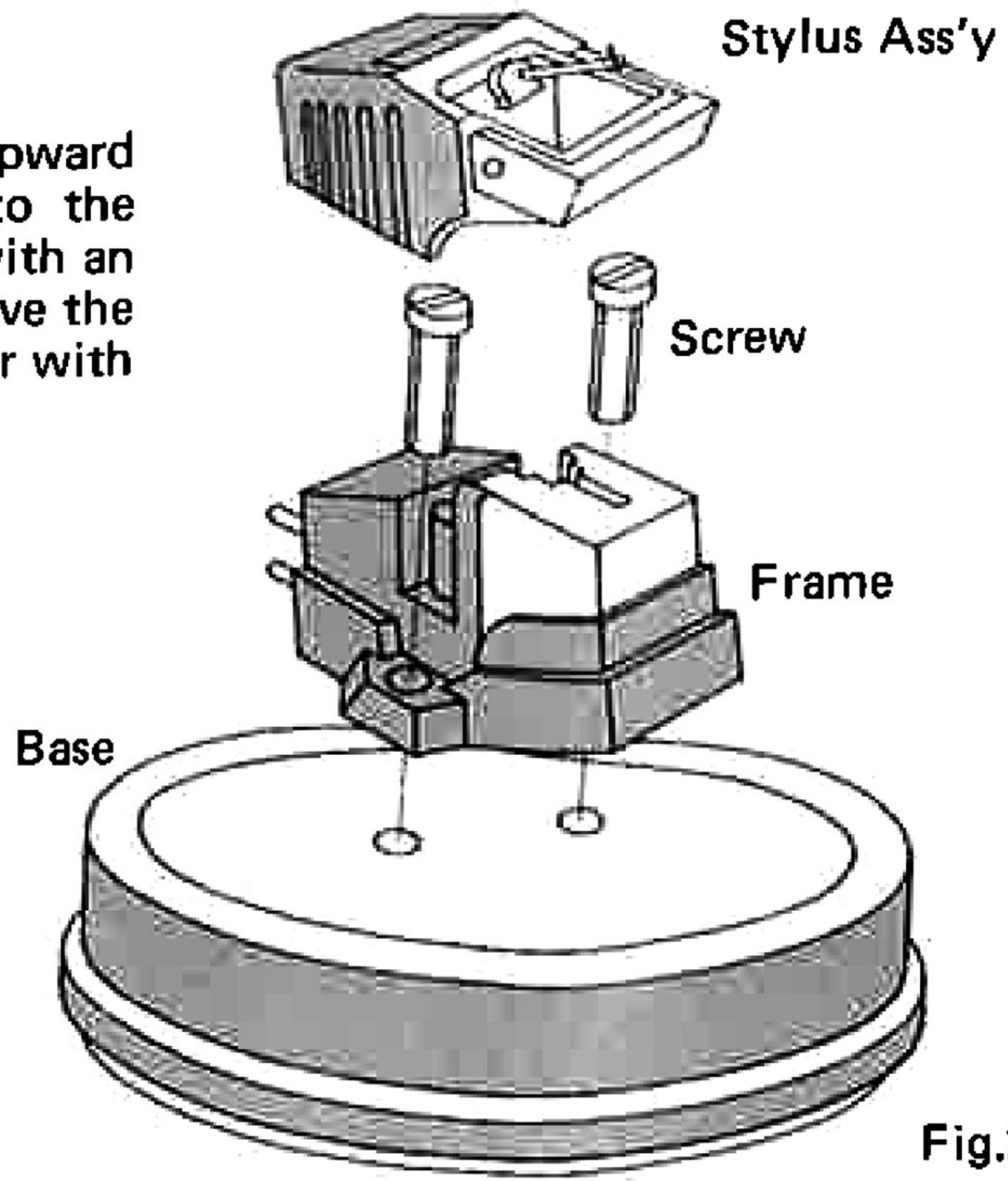

Fig.2

www.hifiengine.com

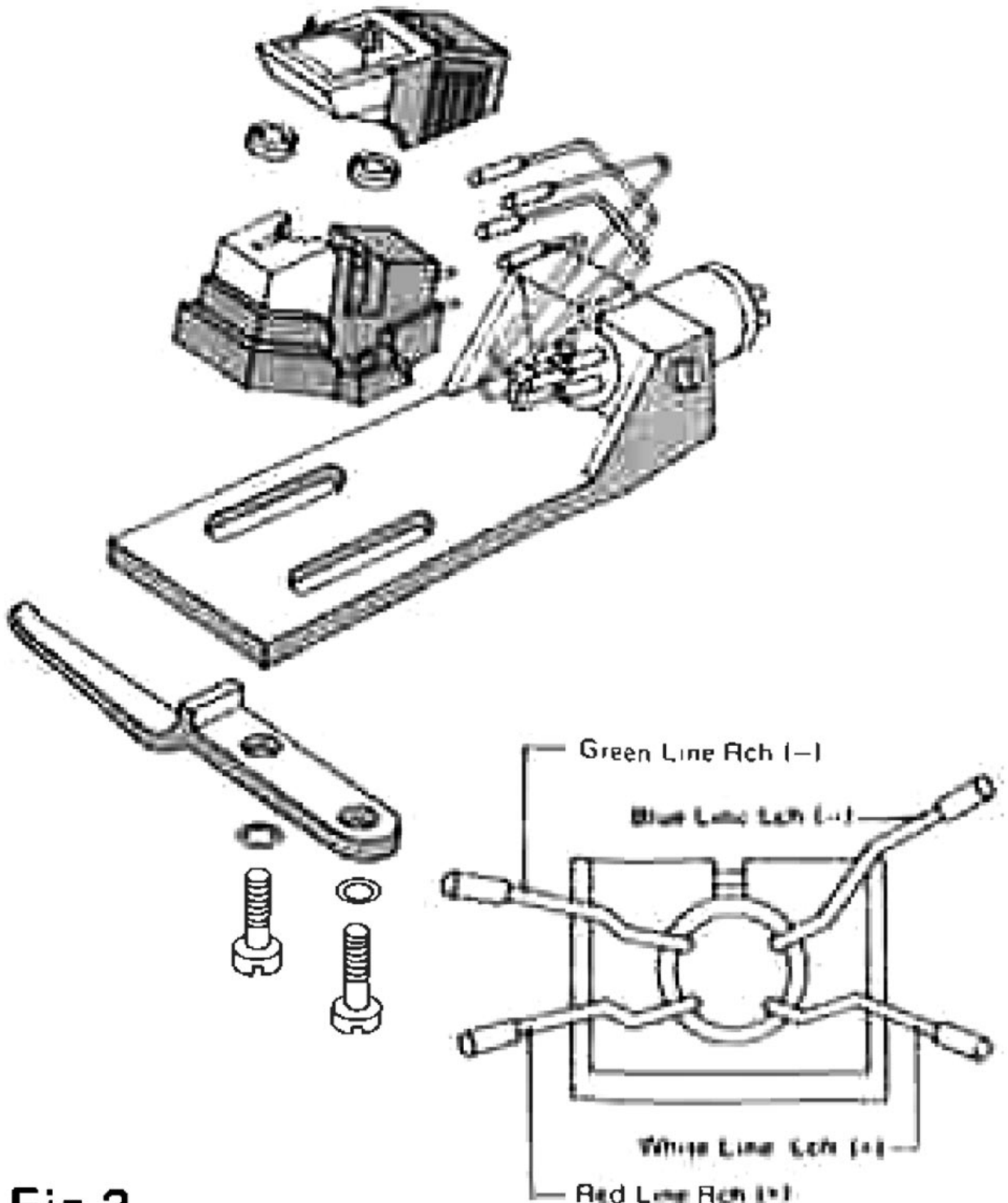

Fig.3

2. Mounting the cartridge on the head shell

With the stylus ass'y left disconnected, mount the cartridge on the head shell with screws, nuts and washer by means of an attached screw-driver as shown in Fig. 3. Also, connect lead wires according to each color. Finally, insert the stylus ass'y in the cartridge.

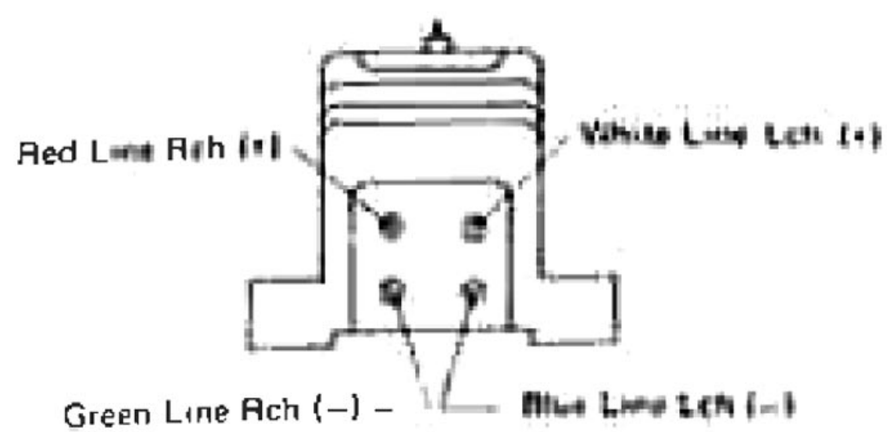

www.hifiengine.com

Handling Instructions (Cautions)

1) The needle tip of the cartridge must be kept free from dust. Otherwise, it will lead to the distortion of sound, change in tone quality, etc. Before playing, therefore, clean the needle tip lightly with an attached brush from the base of the cantilever toward the needle tip.
(see Fig. 4)
2) Be sure to clean the surface of a record with a cleaner before playing. This will prolong the life-time of the needle tip and record as well.
3) Pay caution not to touch the needle tip with fingers and drop it on the sound ditch of a record suddenly.
4) Use the cartridge at an appropriate needle pressure. If the needle pressure is too low it may cause a needle jump and damage a record.

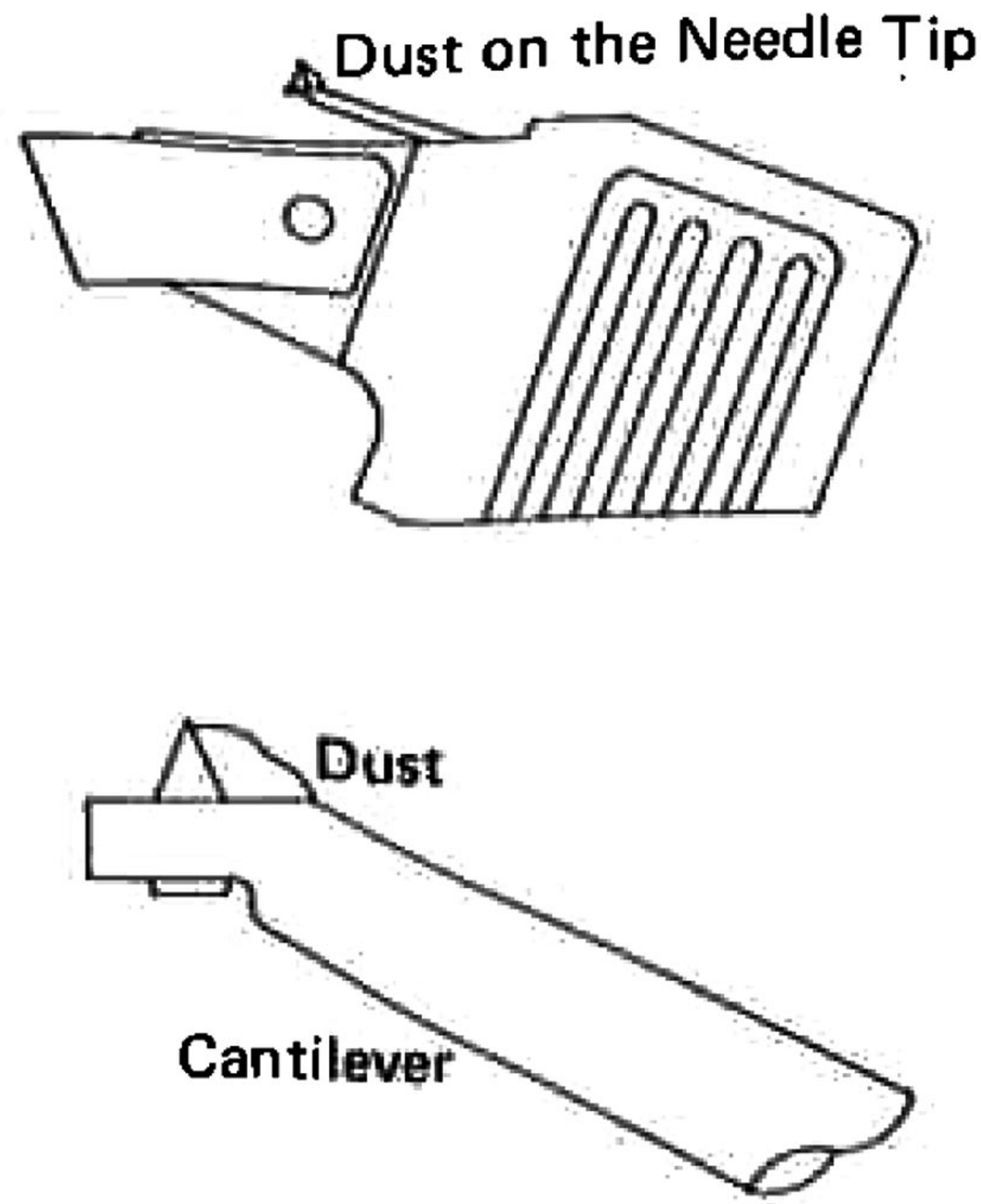

Fig.4

www.hifiengine.com

Stylus replacement

To replace the stylus, pull the stylus case upward, as shown. When mounting a new stylus, insert it in the reverse order of removal.
Although the timing of changing the stylus varies with conditions, it is advisable to change the stylus a little earlier, that is, at every 300 hours approximately. Use stylus for the exclusive use of YM-308II . See Fig.5.

Model	Stylus
YM-308IIX	AN-308IIX
YM-308IIE	AN-308IIE
YM-308II	AN-308II

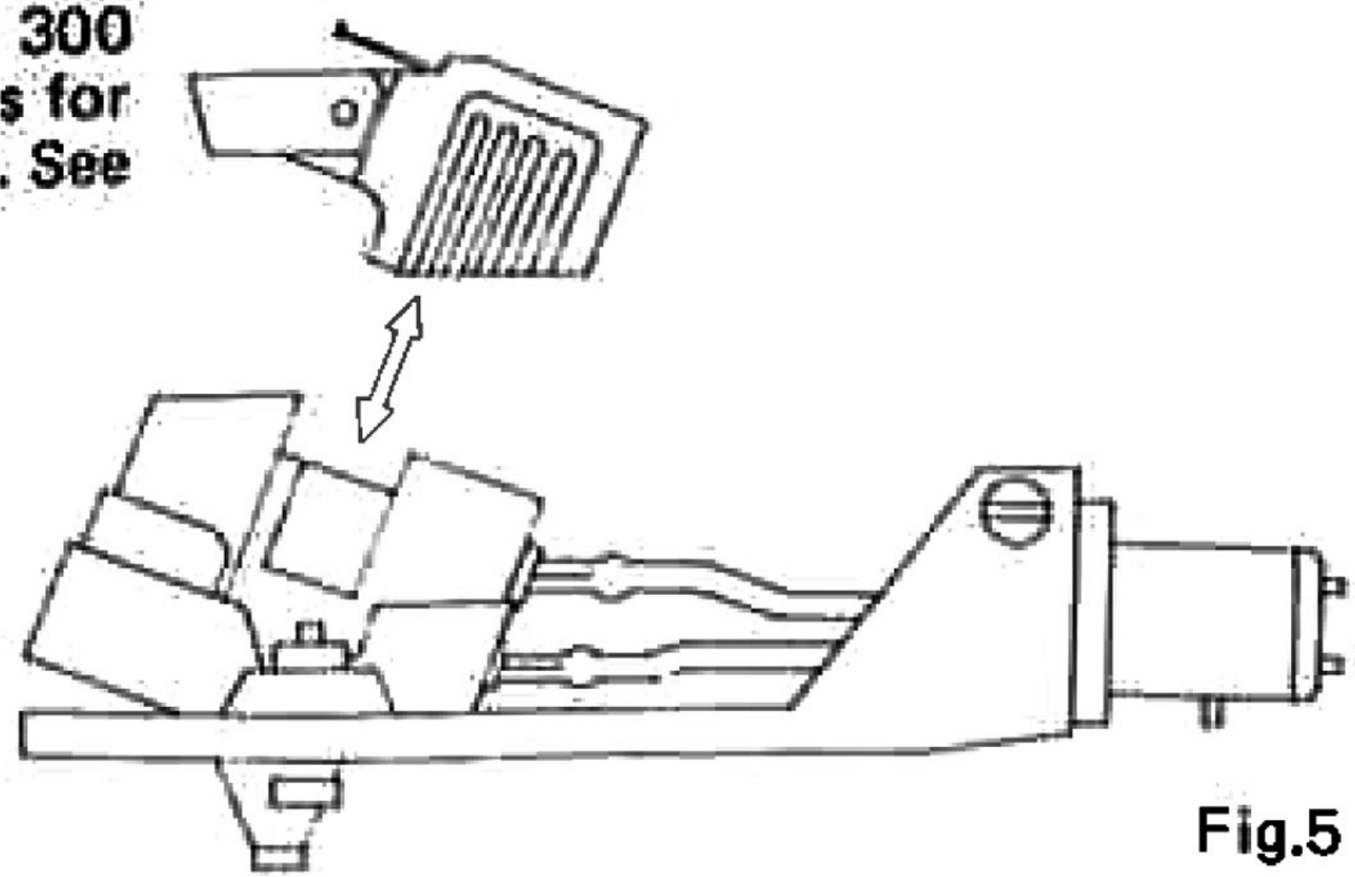

Fig.5

www.hifiengine.com

Specifications

	YM-308IIX
Color Frame	: *Black
Stylus Case	: Red
Frequency Response	: 20 ~ 30,000Hz
Channel Separation	: More than 25dB at 1,000Hz
Output Voltage	: 4mV at 1,000Hz (50mm/sec)
Channel Balance	: Within 1.0dB at 1,000Hz
Impedance	: 2.8kΩ at 1,000Hz
DC Resistance	: 810Ω
Load Resistance	: 30 ~ 100kΩ
Stylus	: 0.3 x 0.8 mil elliptical block diamond (AN-308IIX)
Compliance	: 18 x 10^{-6} cm/dyne at 100Hz
Tracking Force	: 1.7 ± 0.3g
Weight	: 6g
Overall Dimensions	: 29 x 17.5 x 17mm
Mounting	: 12.7mm or 1/2"

www.hifiengine.com

YM-308ⅡE	YM-308Ⅱ
: Yellow	: White
: Black	: Black
: 20 ~ 30,000Hz	: 20 ~ 30,000Hz
: More than 20dB at 1,000Hz	: More than 20dB at 1,000Hz
: 4mV at 1,000Hz (50mm/sec)	: 4mV at 1,000Hz (50mm/sec)
: Within 1.5dB at 1,000Hz	: Within 1.5dB at 1,000Hz
: 2.8kΩ at 1,000Hz	: 2.8kΩ at 1,000Hz
: 810Ω	: 810Ω
: 30 ~ 100kΩ	: 30 ~ 100kΩ
: 0.3 x 0.8mil elliptical diamond (AN-308ⅡE)	: 0.5 mil diamond (AN-308Ⅱ)
: 10×10^{-6} cm/dyne at 100Hz	: 10×10^{-6} cm/dyne at 100Hz
: 2 ± 0.5g	: 2 ± 0.5g
: 6g	: 6g
: 29 x 17.5 x 17mm	: 29 x 17.5 x 17mm
: 12.7mm or 1/2"	: 12.7mm or 1/2"

www.hifiengine.com

Frequency Characteristics

YM-308Ⅱ, ⅡE

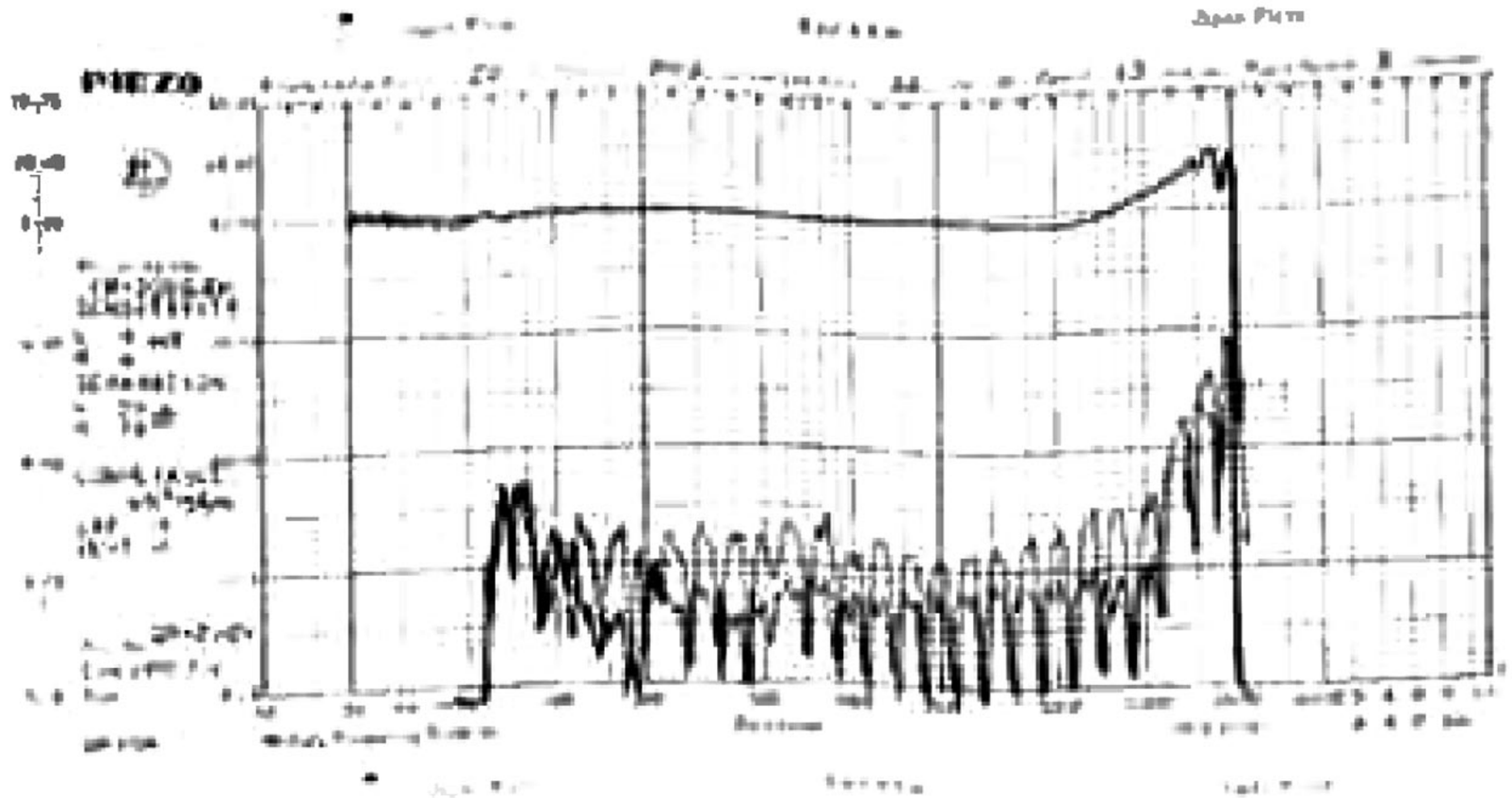

YM-308ⅡX

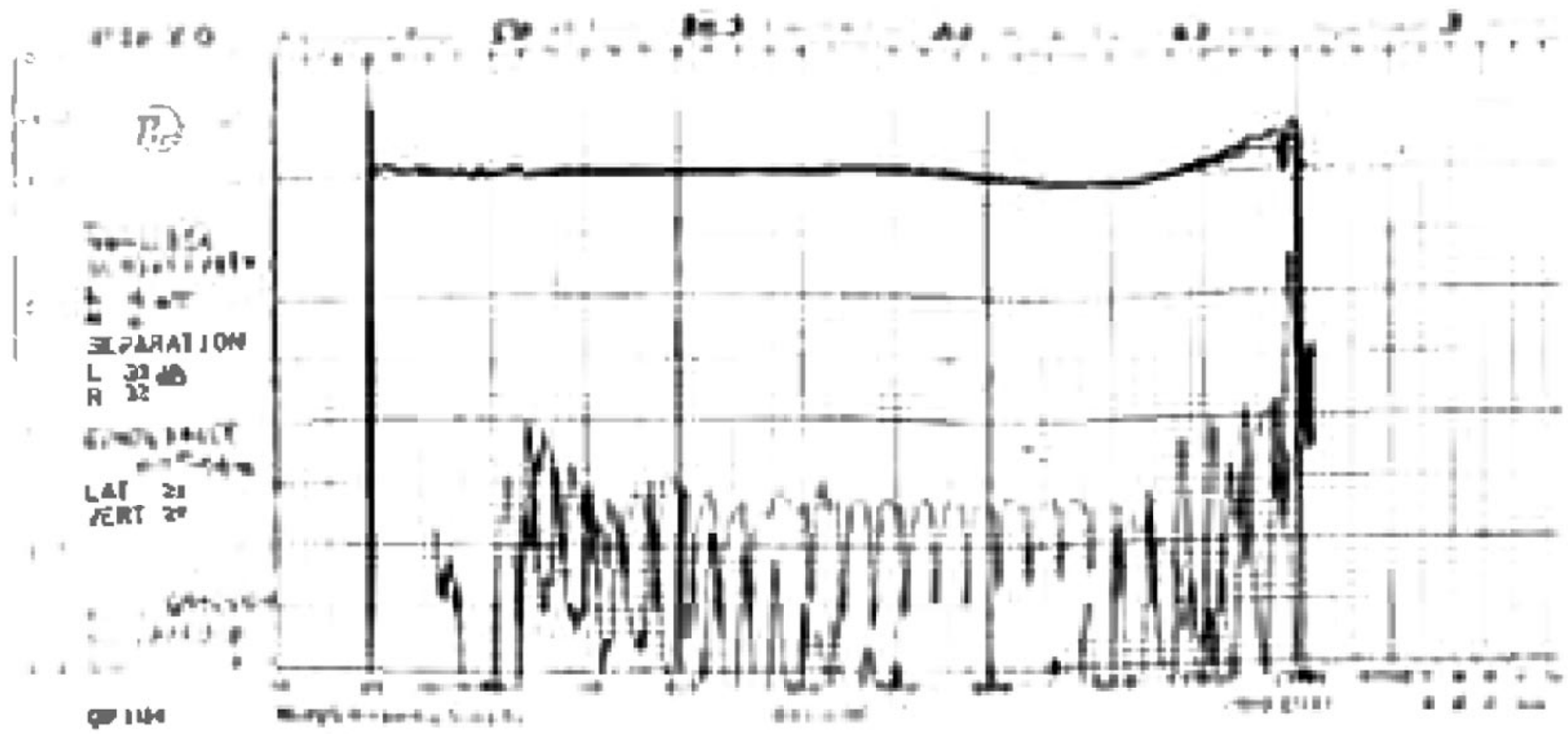

www.hifiengine.com

External Dimensions

	Q'ty
Screw	2
Nut	2
Washer	2
Terminal Tip	4
Screw-driver	1
Brush	1

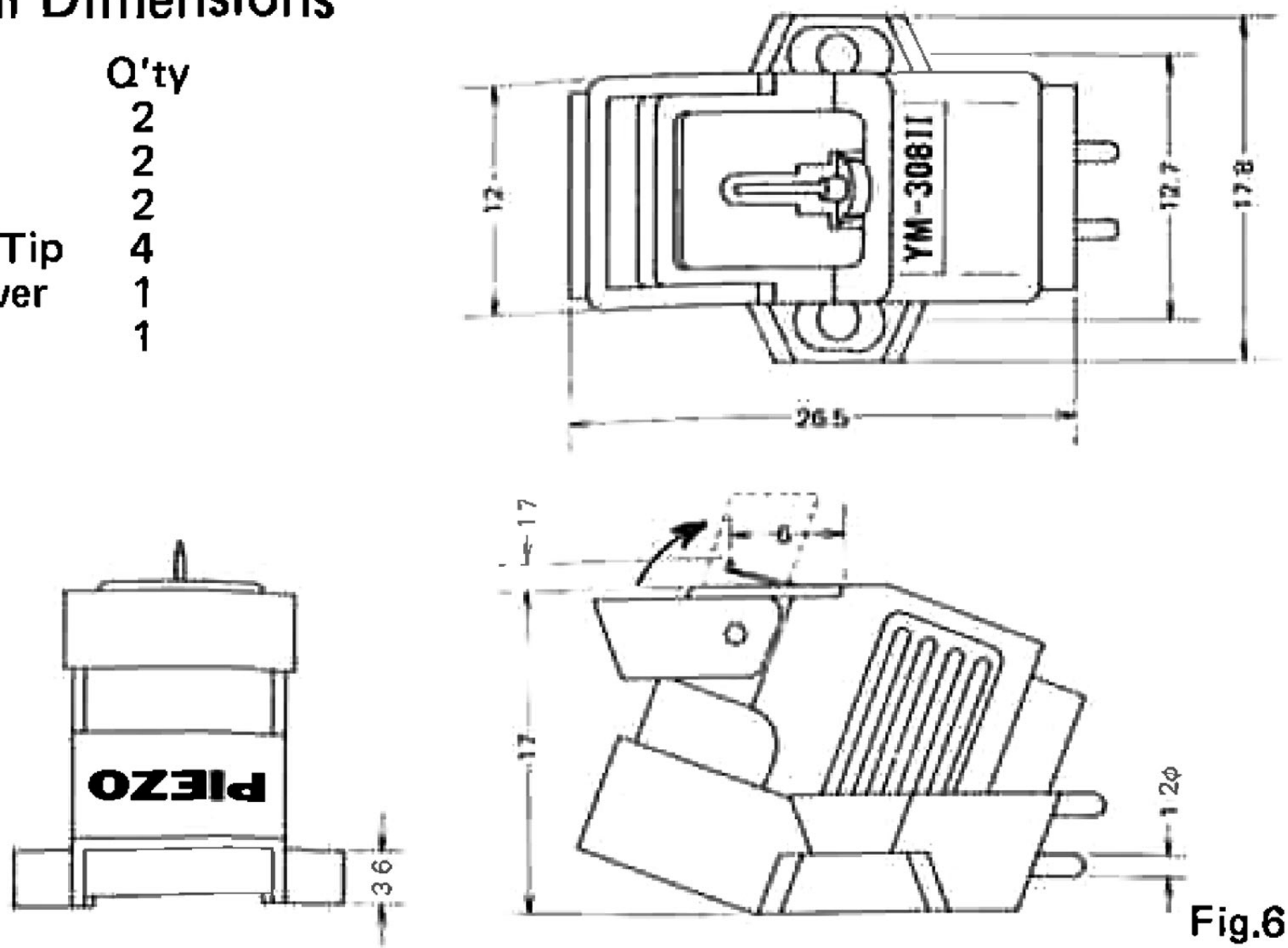

Fig.6

www.hifiengine.com

JAPAN PIEZO CO., LTD.
1-12-17 KAMIRENJAKU MITAKA-SHI TOKYO JAPAN
PHONE: TOKYO MUSASHINO 0422-51-3151
CABLE ADD: "PIEZO" MUSASHINO TOKYO
OSAKA OFFICE PHONE: 06-632-1393

PIEZO

530140C

www.hifiengine.com