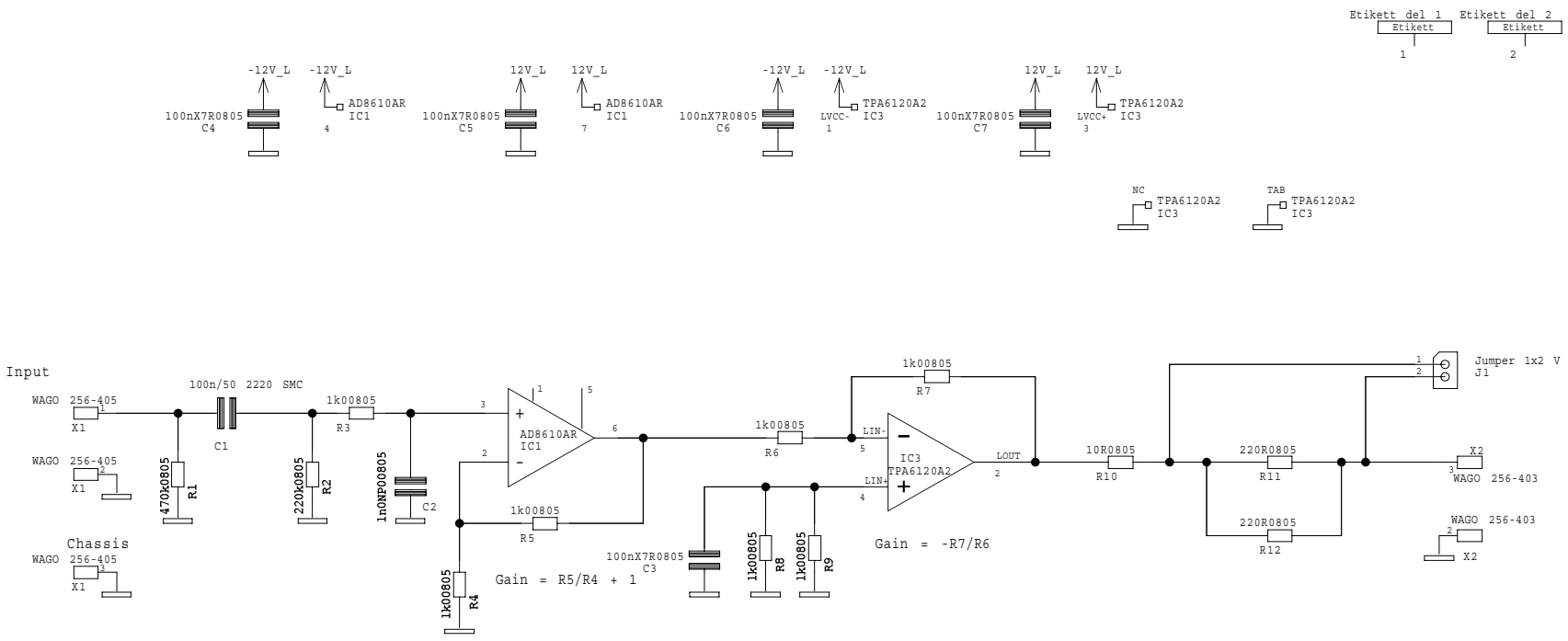


This document belongs to Per-Anders Sjöström - may not be given or copied without permission.

| | | | |
|---|---|---|---|
| Company: P-A Sjöström, Göteborg | | | |
| Product no.: QRV-07 | Customer: Per-Anders Sjöström | | |
| Product name: Headphone amp, SMD<br>Left channel | | | |
| Issue A | Design P-A | Drawn P-A | Appr. P-A |
| File name qrv07r0layout | A3 Revision 0 | Created 2004-08-20 | |
| Printed 2004-08-20 | Page 1 of 4 | Changed 2004-08-20 | |

pa@mbox331.tele2.se http://home.swipnet.se/~w-50719/hifi/