This document contains proprietary information which is the property of SwitchLAB. They may not be disclosed, reproduced or used without express written consent from SwitchLAB

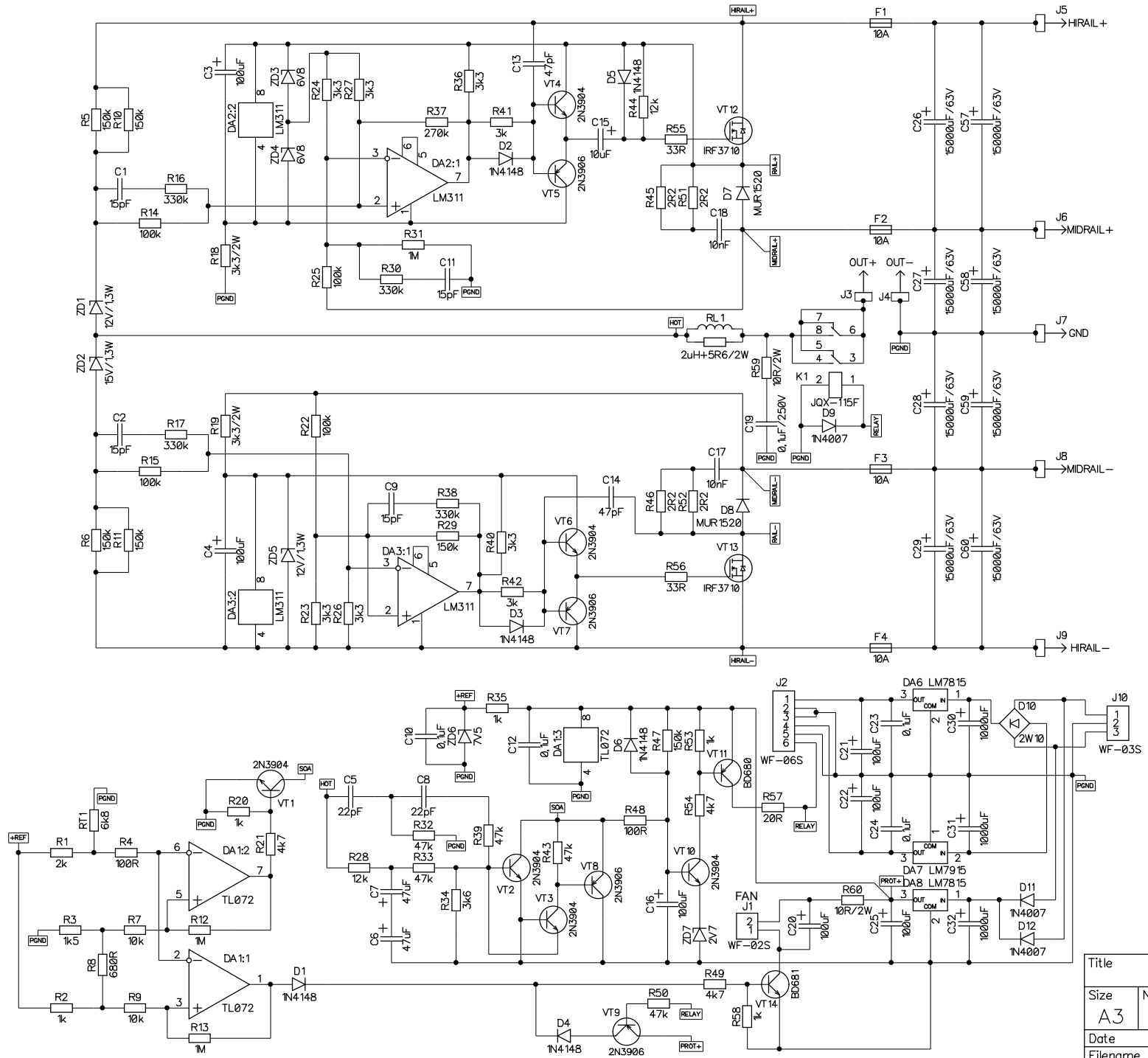

Title	{Title}	
Size A3	Number {Drawing Number}	Rev {Revision}
Date Mon Nov 09, 2009		Drawn by {Drawn By}
Filename AmpBoard_V02_H.sch		Sheet 1 of 2