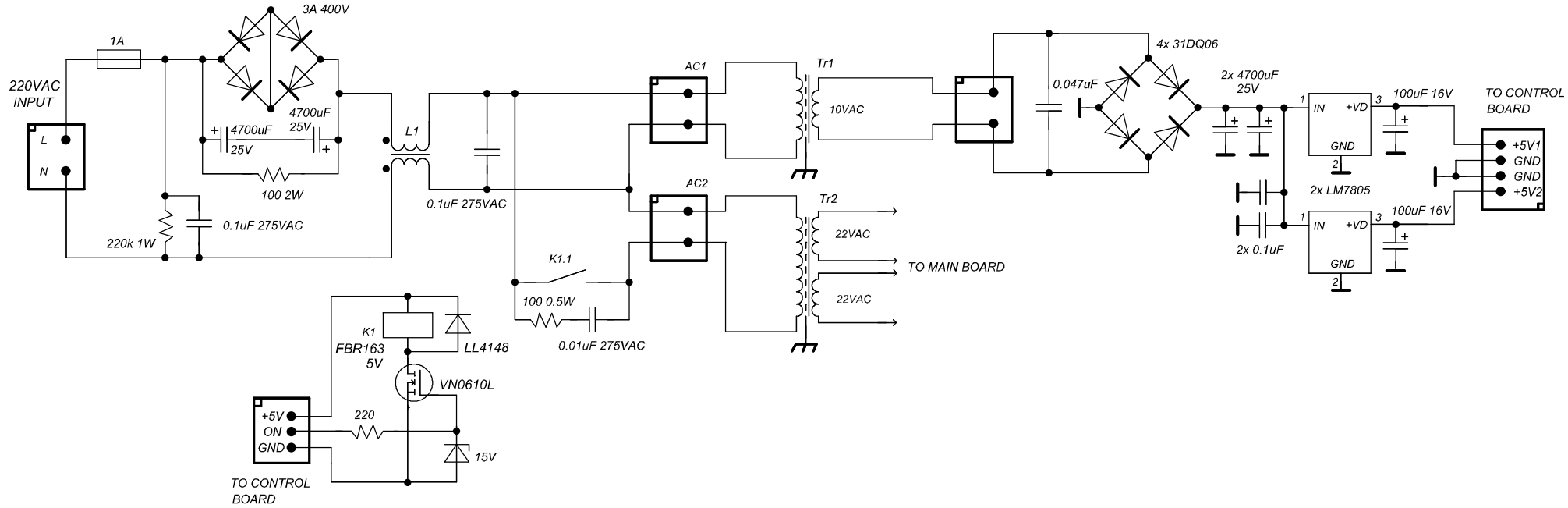

+5V

POWER BOARD	VD-TWO 2007