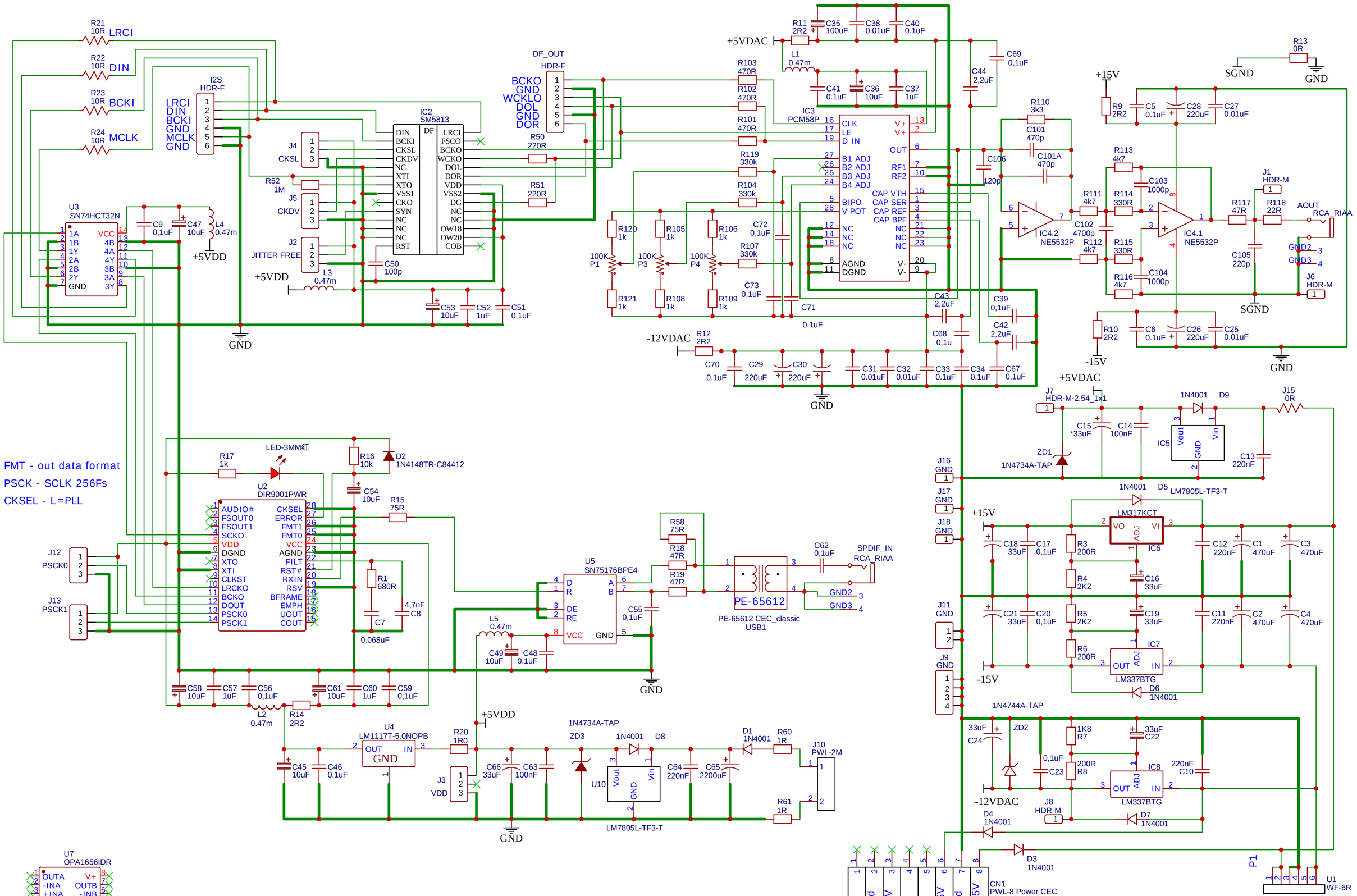
FMT - out data format
PSCK - SCLK 256Fs
CKSEL - L=PLL
IC2 SM5813
IC3 PCM58P
U2 DIR9001PWR
U3 SN74HCT32N
U4 LM1117T-5.0NOPB
U5 SN75176BPE4
U7 OPA1656IDR
IC4.1 NE5532P
IC4.2 NE5532P
IC5 LM7805L-TF3-T
IC6 LM317KCT
IC7 LM337BTG
IC8 LM337BTG
U10 LM7805L-TF3-T
PE-65612
PE-65612 CEC_classic
USB1
CN1 PWL-8 Power CEC
U1 WF-6R
J10 PWL-2M
I2S HDR-F
DF_OUT HDR-F
+5VDAC
-12VDAC
+15V
-15V
+5VDD
GND
SGND
TITLE:
MONO DAC PCM58p
REV: 10
Company: Your Company
Sheet: 1/1
Date: 2021-09-28
Drawn By: dxx573k
EasyEDA