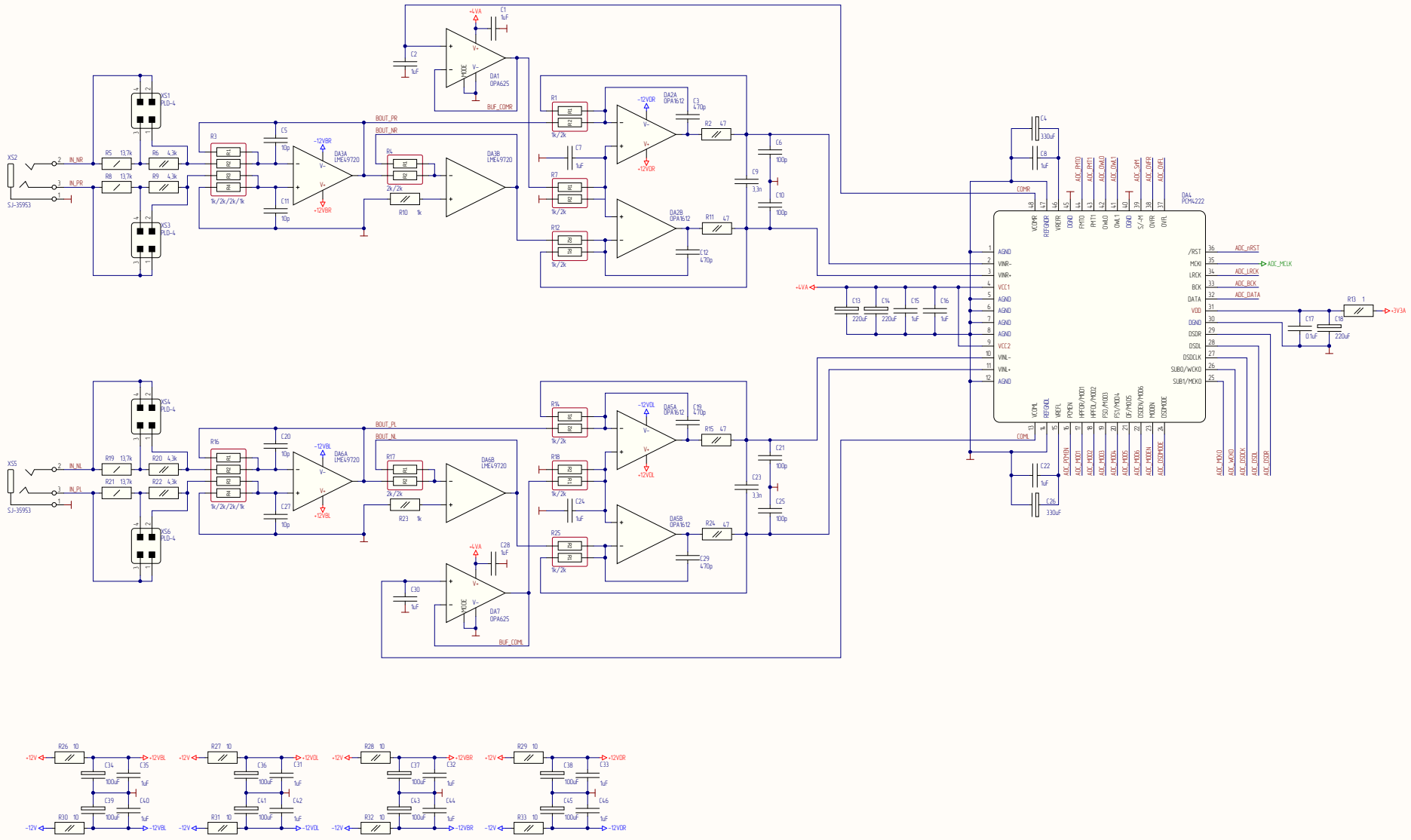

Title		
Size A2	Number	Revision
Date: 16.12.2021	Sheet of	
File: D:\Projects\...\MOTHER_BOARD_ADC.SchDoc	Title: Sch Doc	