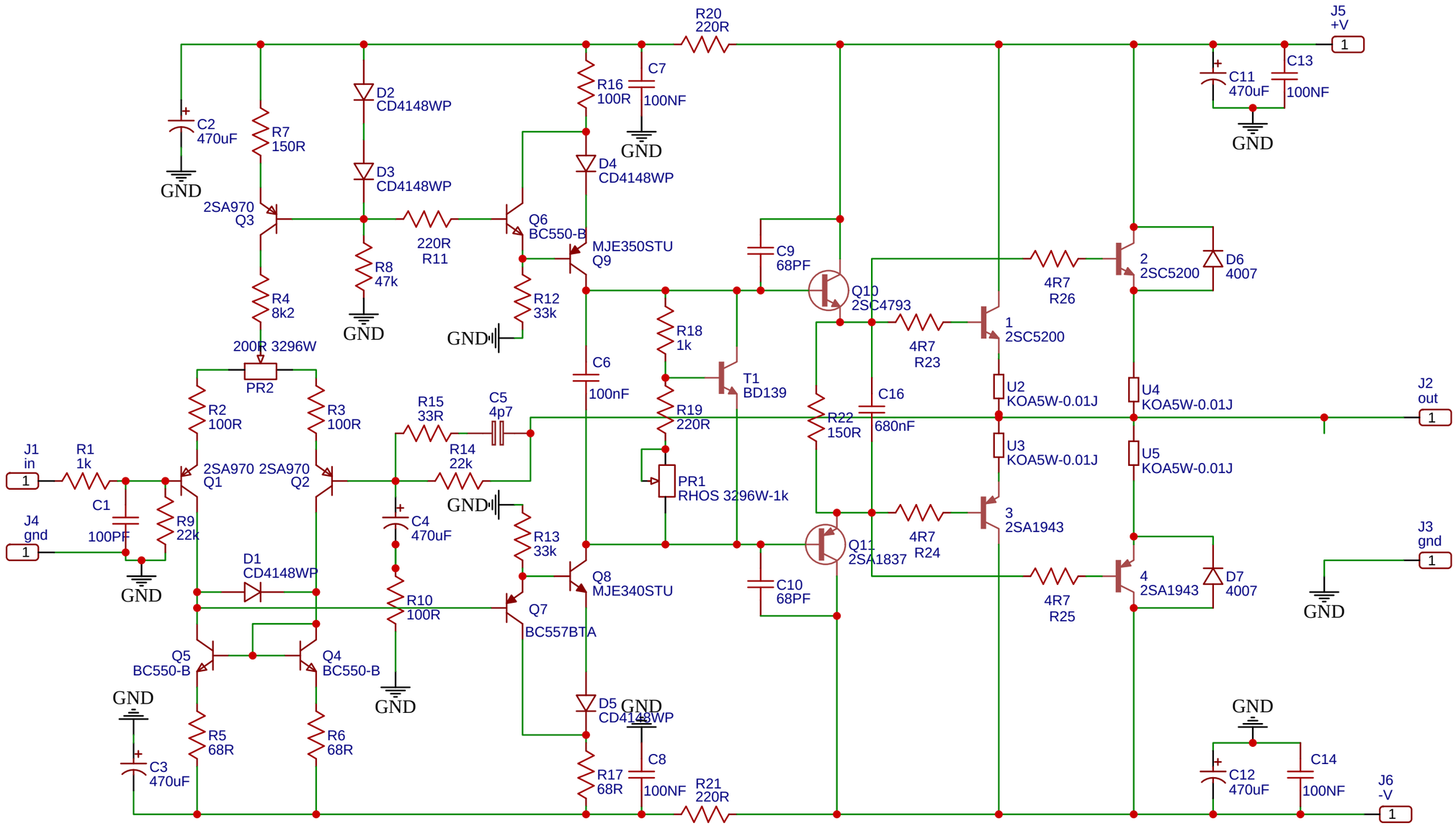

TITLE: SuperAX-14		REV: 1.0
EasyEDA	Company: Your Company	Sheet: 1/1
	Date: 2020-09-03 Drawn By: Astaro	