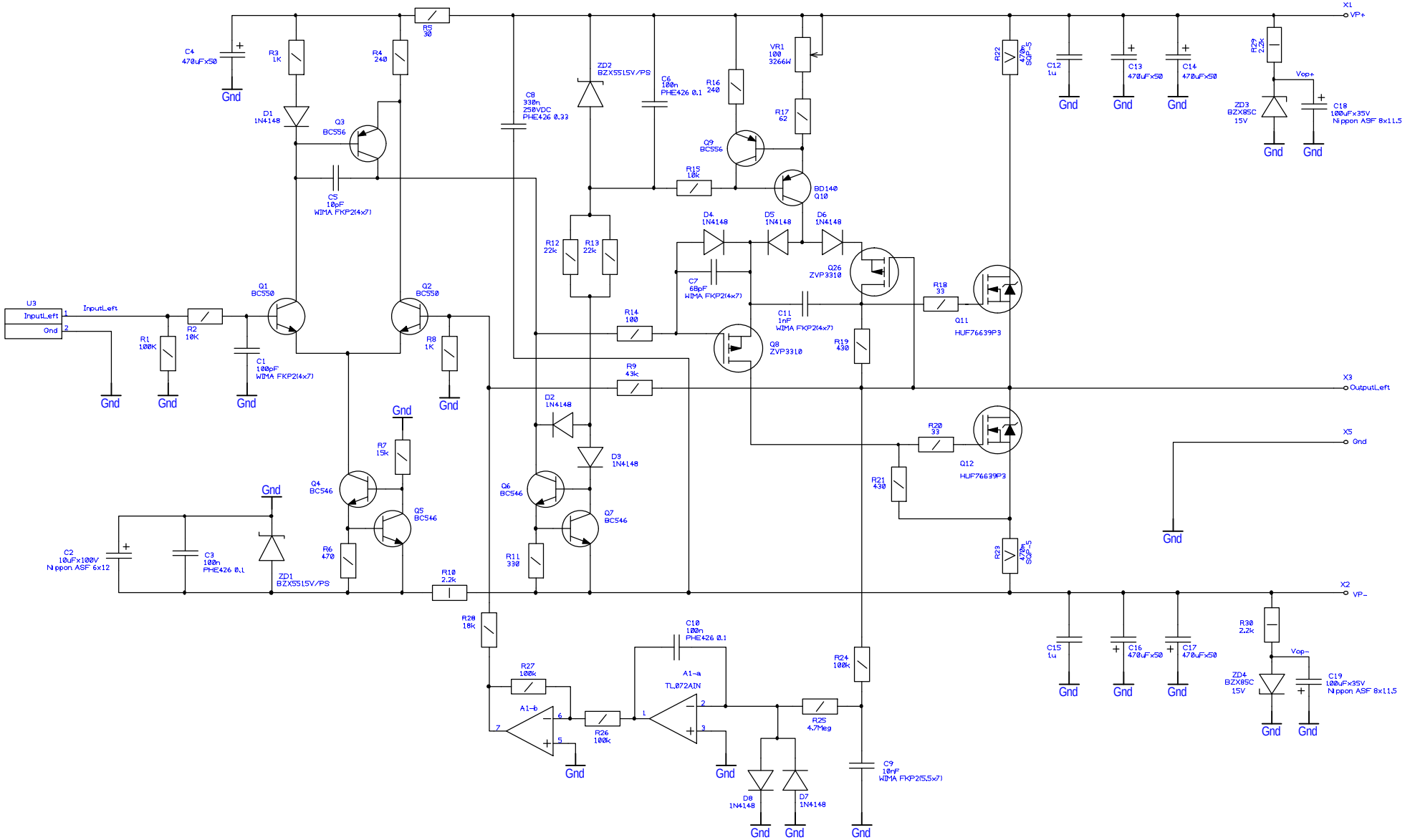
X1
VP+
X2
VP-
X3
OutputLeft
X5
Gnd
U3
InputLeft
Gnd
C4
470uFx50
R3
1K
R4
240
R5
30
D1
1N4148
Q3
BC556
C5
10pF
WIMA FKP2(4x7)
C8
330n
250VDC
PHE426 0.33
ZD2
BZX5515V/PS
C6
100n
PHE426 0.1
R16
240
VR1
100
3266W
R17
62
Q9
BC556
R15
10k
BD140
Q10
R12
22k
R13
22k
D4
1N4148
D5
1N4148
D6
1N4148
C7
68pF
WIMA FKP2(4x7)
Q26
ZVP3310
C11
1nF
WIMA FKP2(4x7)
R18
33
Q11
HUF76639P3
R14
100
Q8
ZVP3310
R19
430
R22
470m
50PF-5
C12
1u
C13
470uFx50
C14
470uFx50
R29
2.2k
Vop+
ZD3
BZX85C
15V
C18
100uFx35V
Nippon ASF 8x11.5
Q1
BC550
Q2
BC550
R1
100K
R2
10K
C1
100pF
WIMA FKP2(4x7)
R8
1K
R9
43k
D2
1N4148
D3
1N4148
R20
33
Q12
HUF76639P3
R21
430
R7
15k
Q4
BC546
Q5
BC546
Q6
BC546
Q7
BC546
R6
470
R11
330
R23
470m
50PF-5
C2
10uFx100V
Nippon ASF 6x12
C3
100n
PHE426 0.1
ZD1
BZX5515V/PS
R10
2.2k
R28
18k
C10
100n
PHE426 0.1
R27
100k
A1-a
TL072AIN
A1-b
R26
100k
R25
4.7Meg
R24
100k
C9
10nF
WIMA FKP2(5.5x7)
D8
1N4148
D7
1N4148
C15
1u
C16
470uFx50
C17
470uFx50
R30
2.2k
Vop-
ZD4
BZX85C
15V
C19
100uFx35V
Nippon ASF 8x11.5