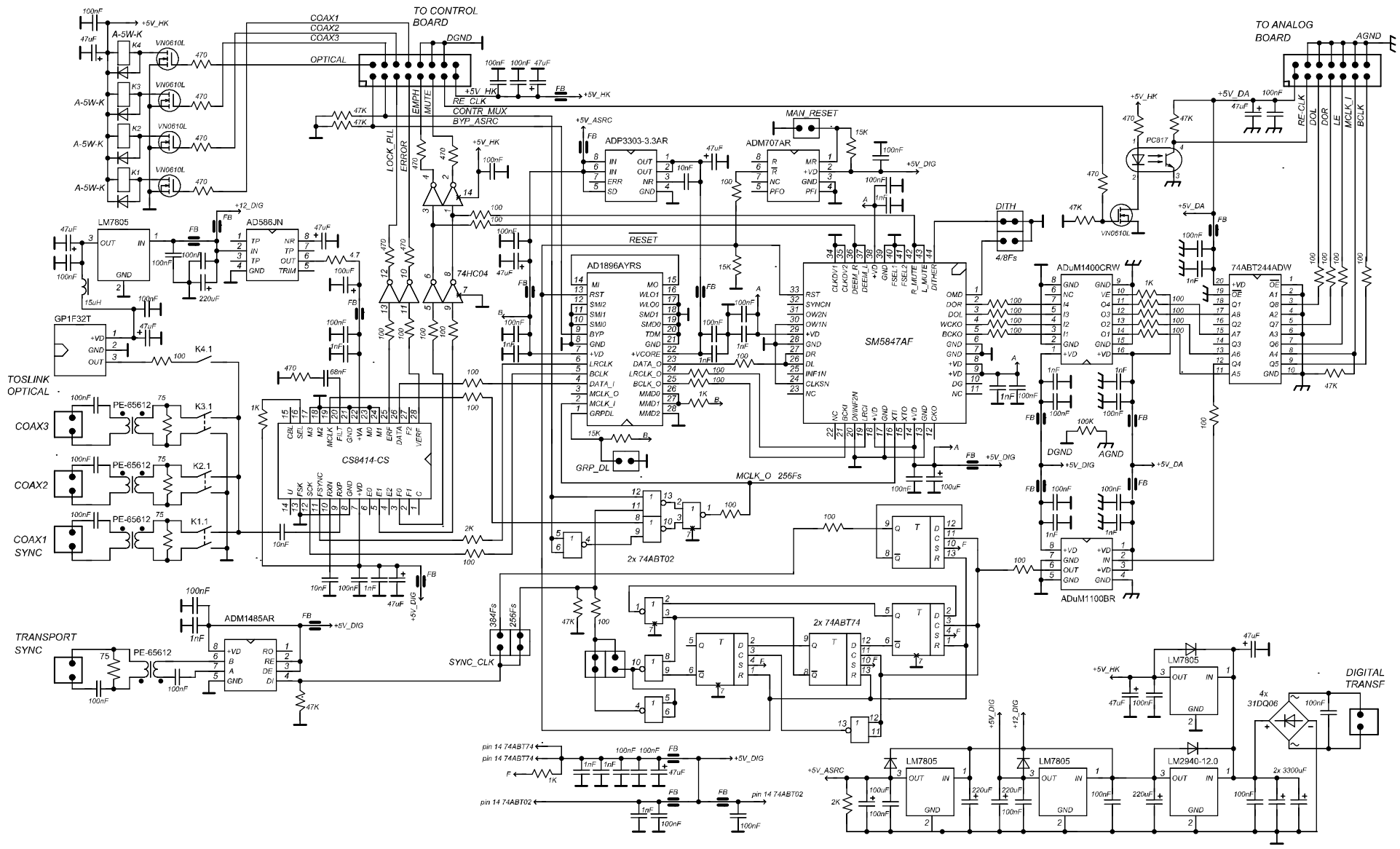
TO CONTROL BOARD
TO ANALOG BOARD
COAX1
COAX2
COAX3
OPTICAL
TOSLINK OPTICAL
TRANSPORT SYNC
DIGITAL TRANSF
ADP3303-3.3AR
ADM707AR
MAN_RESET
AD1896AYRS
SM5847AF
CS8414-CS
ADM1485AR
ADuM1400CRW
ADuM1100BR
74ABT244ADW
2x 74ABT02
2x 74ABT74
74HC04
LM7805
LM2940-12.0
AD586JN
GP1F32T
PE-65612
PC817
VN0610L
4x 31DQ06
DAC1862 DIGITAL BOARD
VD-TWO 2007-2008