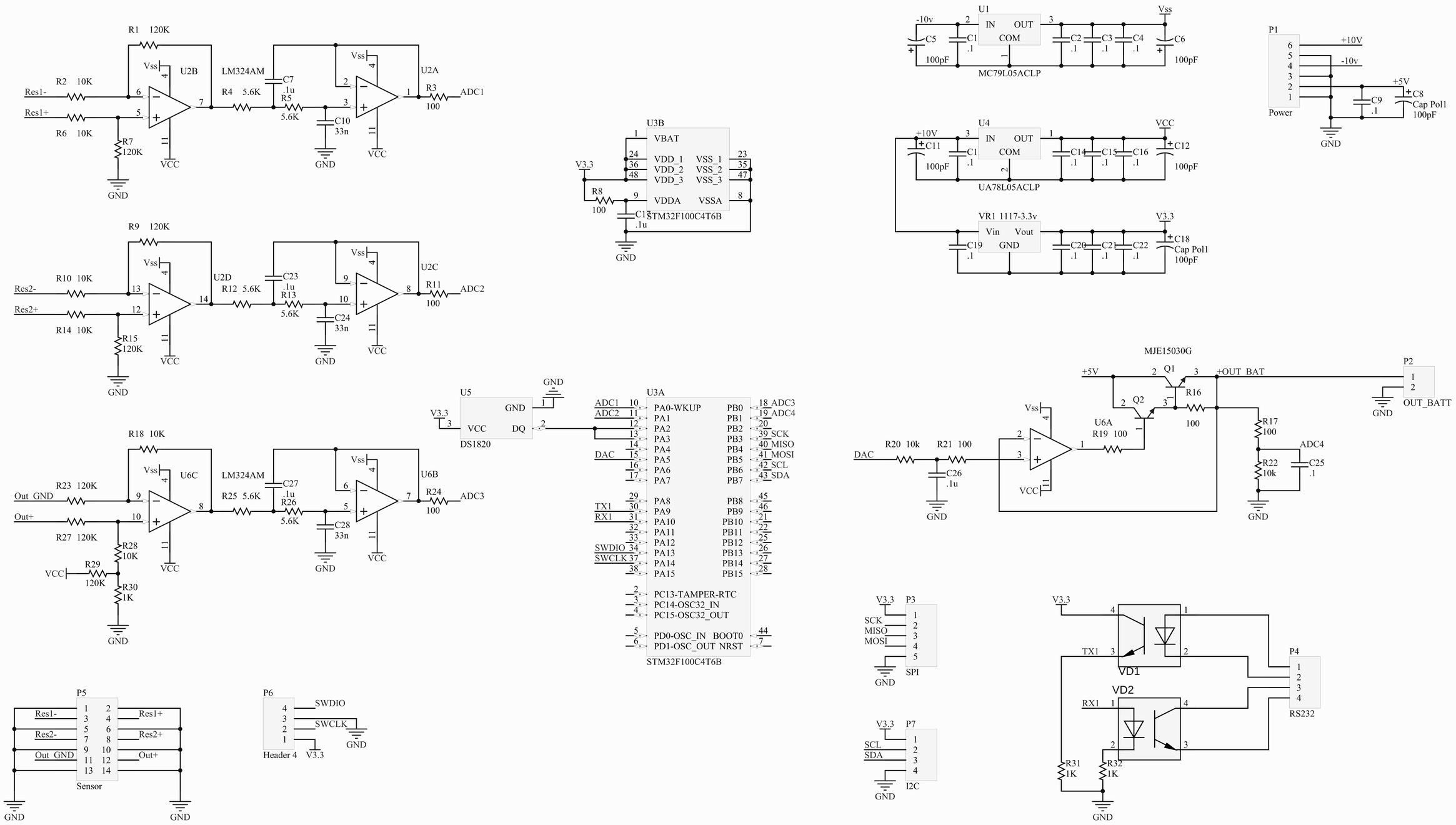

Title		
Size A3	Number	Revision
Date: 09.05.2017	Sheet of	
File: C:\alt\P1\batareyka.SchDoc	Drawn By:	