LEFT CHANNEL POWER AMP

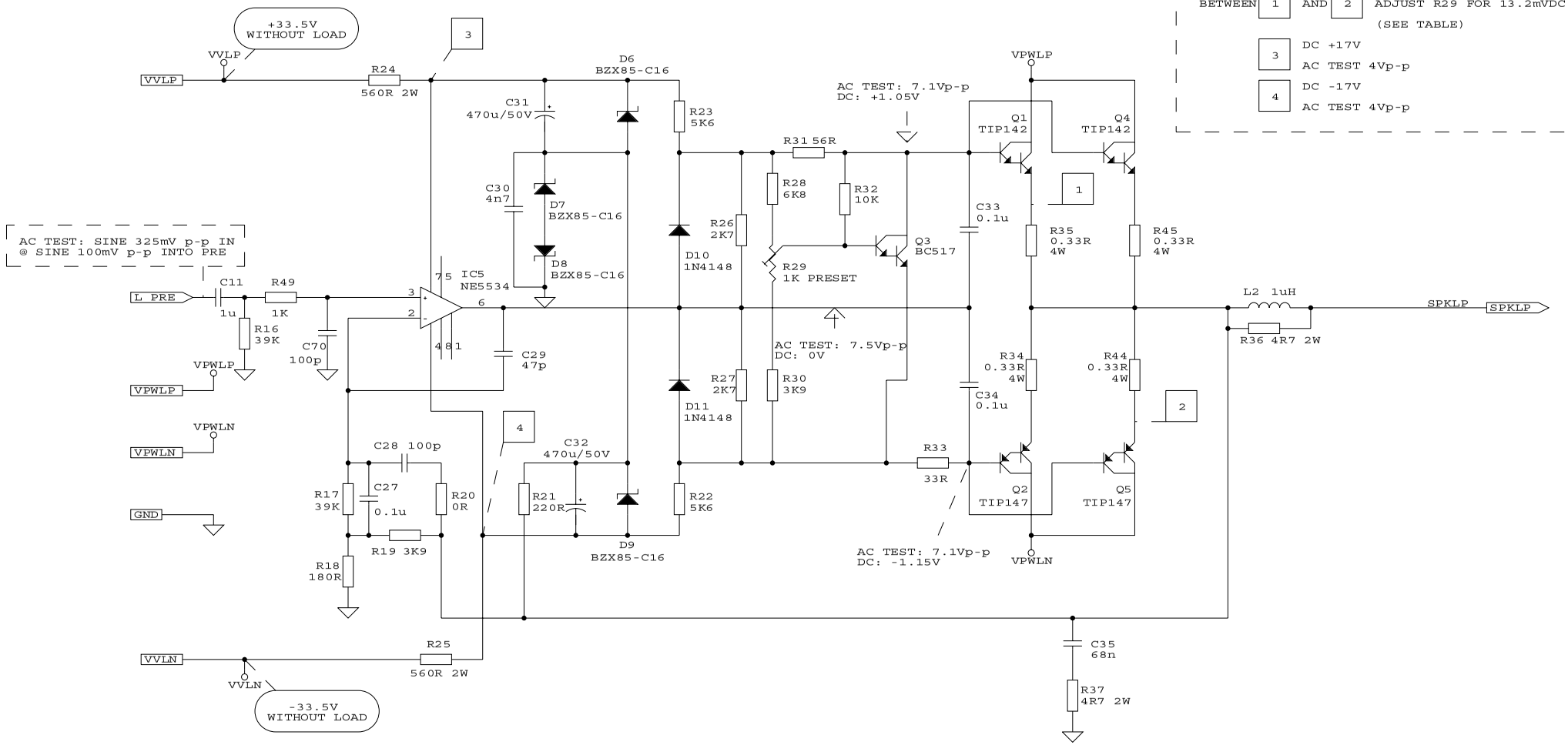

PCB REFERENCES

BETWEEN 1 AND 2 ADJUST R29 FOR 13.2mVDC (SEE TABLE)

3 DC +17V
AC TEST 4Vp-p

4 DC -17V
AC TEST 4Vp-p

ALL RESISTORS ARE 0.25W 1% METAL FILM UNLESS OTHERWISE INDICATED

Federico Paoletti	
Title PUCCINI INTEGRATED AMP - LEFT POWER	
Size B	Document Number
Date: March 24, 1999	Sheet 3 o