PIONEER
The Art of Entertainment

Service Manual

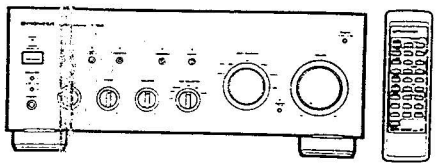

ORDER NO.
ARP2784

A-702R, A-702R-G, A-602R AND A-602 HAVE THE FOLLOWING :

Type	Model				Power Requirement	Remarks
	A-702R	A-702R-G	A-602R	A-602		
HEWZ	○	—	○	○	AC220-230V, 240V (switchable)*	
HE	○	—	○	○	AC220-230V, 240V (switchable)*	
HEZ	—	○	—	—	AC220-230V, 240V (switchable)*	
HB	—	—	—	○	AC220-230V, 240V (switchable)*	
SD	○	—	○	—	AC110V, 120-127V, 220V, 240V (switchable)	

*Change the connection of the power transformer's primary wiring.

- This manual is applicable to the following : A-702R/HEWZ, HE and SD ; A-702R-G/HEZ ; A-602R/HEWZ, HE and SD ; A-602/HEWZ, HE and HB.
- For the following : A-702R/HE and SD ; A-702R-G/HEZ ; A-602R/HEWZ, HE and SD ; A-602/HEWZ, HE and HB, refer to page 45.

CONTENTS

1. EXPLODED VIEWS, PACKING AND PARTS LIST 2
2. DISASSEMBLY 6
3. BLOCK DIAGRAM 7
4. SCHEMATIC AND PCB CONNECTION DIAGRAMS 9
5. PCB PARTS LIST 39
6. ADJUSTMENTS 44
7. FOR A-702R/HE, SD, A-702R-G/HEZ, A-602R/HEWZ, HE, SD, A-602/HEWZ, HE AND HB 45
8. PANEL FACILITIES 65
9. SPECIFICATIONS 68

DFF MAY 1993 Printed in Japan

1. EXPLODED VIEWS, PACKING AND PARTS LIST

NOTES :

- *Parts marked by "NSP" are generally unavailable because they are not in our Master Spare Parts List.*
- *The ⚠ mark found on some component parts indicates the importance of the safety factor of the part. Therefore, when replacing, be sure to use parts of identical designation.*
- *Parts marked by "◉" are not always kept in stock. Their delivery time may be longer than usual or they may be unavailable.*

Parts List of Exterior and Packing

Mark	No.	Description	Parts No.
	1	POWER AMP ASSY	AWZ4882
	2	VOLTAGE AMP ASSY	AWZ4883
	3	REC OUT ASSY	AWZ4884
	4	DIODE ASSY	AWZ4886
	5	POWER TRANS ASSY	AWZ4887
	6	POWER SW ASSY	AWZ4890
⚠	7	TRANSISTOR (Q3)	2SA1265N
⚠	8	TRANSISTOR (Q4)	2SA1265N
⚠	9	TRANSISTOR (Q7)	2SA1265N
⚠	10	TRANSISTOR (Q8)	2SA1265N
⚠	11	TRANSISTOR (Q1)	2SC3182N
⚠	12	TRANSISTOR (Q2)	2SC3182N
⚠	13	TRANSISTOR (Q5)	2SC3182N
⚠	14	TRANSISTOR (Q6)	2SC3182N
⚠	15	TRANSISTOR (Q231)	2SC4137
⚠	16	TRANSISTOR (Q232)	2SC4137
⚠	17	ELECTROLYTIC CAPACITOR (C1)	ACH1236
⚠	18	POWER TRANSFORMER (T1)	ATS1488
	19	SWITCH (S3, REC SELECTOR)	ASU1047
NSP	20	TERMINAL SCREW	AKE-031
⚠	21	AC SOCKET 3-P	AKP-502
⚠	22	FUSE (T1A/250V, FU4)	AEK-508
⚠	23	FUSE (T3.15A/250V, FU1)	AEK-513
⚠	24	AC POWER CORD	ADG1127
	25	HEADPHONE ASSY	AWZ4885
	26	TONE ASSY	AWZ4891
	27	INPUT ASSY	AWZ4892
	28	MPU ASSY	AWZ5071
	29	VOLUME ASSY	AWZ5072
	30	LED LENS	AAK2459
	31	NAME PLATE (METAL)	AAM1058
	32	LED LENS	PNW2019
	33	ROTARY KNOB M	AAB1344
	34	ROTARY KNOB L	AAB1347
	35	ROTARY KNOB S	AAB1367
	36	PUSH KNOB A	AAD2430
	37	PUSH KNOB B	AAD2432
	38	POWER KNOB	AAD2434
	39	METAL BONNET	ANE1427
NSP	40	CHASSIS	ANA1214
	41	REAR PANEL	ANC2080
NSP	42	PANEL STAY	AND1057
NSP	43	BOTTOM PLATE	ANF1102
NSP	44	HEAT SINK	ANH1434
	45	LEG ASSY	AMR2590
NSP	46	DAMPER	ABE1008
	47	TRANSISTOR COVER L	ANG1724
NSP	48	HEAT SINK HOLDER	ANG1825
NSP	49	PCB HOLDER	ANG1826
NSP	50	TRANS BASE	ANG1848
NSP	51	SHIELD PLATE A	ANK1244
NSP	52	SHIELD PLATE B	ANK1245
NSP	53	DIODE SHIELD	ANK1246
	54	SPRING	ABH1089
NSP	55	NYLON BINDER	AEC-093
	56	RIVET	AEC-441
NSP	57	PCB SUPPORT	AEC1006
NSP	58	PCB SPACER	AEC1084
NSP	59	PCB SUPPORT	AEC1231
	60	PCB HOLDER	AEC1520
	61	SCREW	IPZ30P120FCU
NSP	62	SHIELD PLATE	AEC1533
	63	SHEET	AEE1014
NSP	64	CUSHION	AEB1074
	65	PANEL BASE	AMB2136
	66	FRONT PANEL	ANB1552
	67	SCREW	ABA-298
	68	SCREW (STEEL)	ABA1007
	69	SCREW (STEEL)	ABA1009
	70	SCREW (STEEL)	ABA1011
	71	SCREW	FBT40P120FCU
	72	SCREW (STEEL)	ABA1050
	73	SCREW	ABA1052
	74	SCREW (STEEL)	ABA1095
	75	SCREW (STEEL)	ABA1192
	76	SCREW (STEEL)	ABA1193
	77	SCREW (STEEL)	ABA1194
	78	SCREW	FBT40P060FZK
	79	NUT	NK70FUC
	80	NUT	NK90FUC
	81	PUSH JOINT	AMR2537
	82	REMOTE SENSOR WINDOW	AAK2457
	83	FUNCTION LENS	AAK2458
	84	OPE. INSTRUCTIONS (German)	ARC1420
	85	REMOTE CONTROL UNIT (CU-A005)	AXD1354
NSP	86	BATTERY (R03, AAA)	AEX-021
	87	STYROL PROTECTOR (R)	AHA1599
	88	STYROL PROTECTOR (L)	AHA1600
	89	PACKING CASE	AHD2534
	90	PACKING SHEET	AHG1204
	91	BATTERY COVER	AZA1375
NSP	92	BINDER	AEF1004
	93	BUSH	ABF1015
	94	WASHER	ABE1028
NSP	95	SHIELD PLATE D	AEC1539

● EXTERIOR

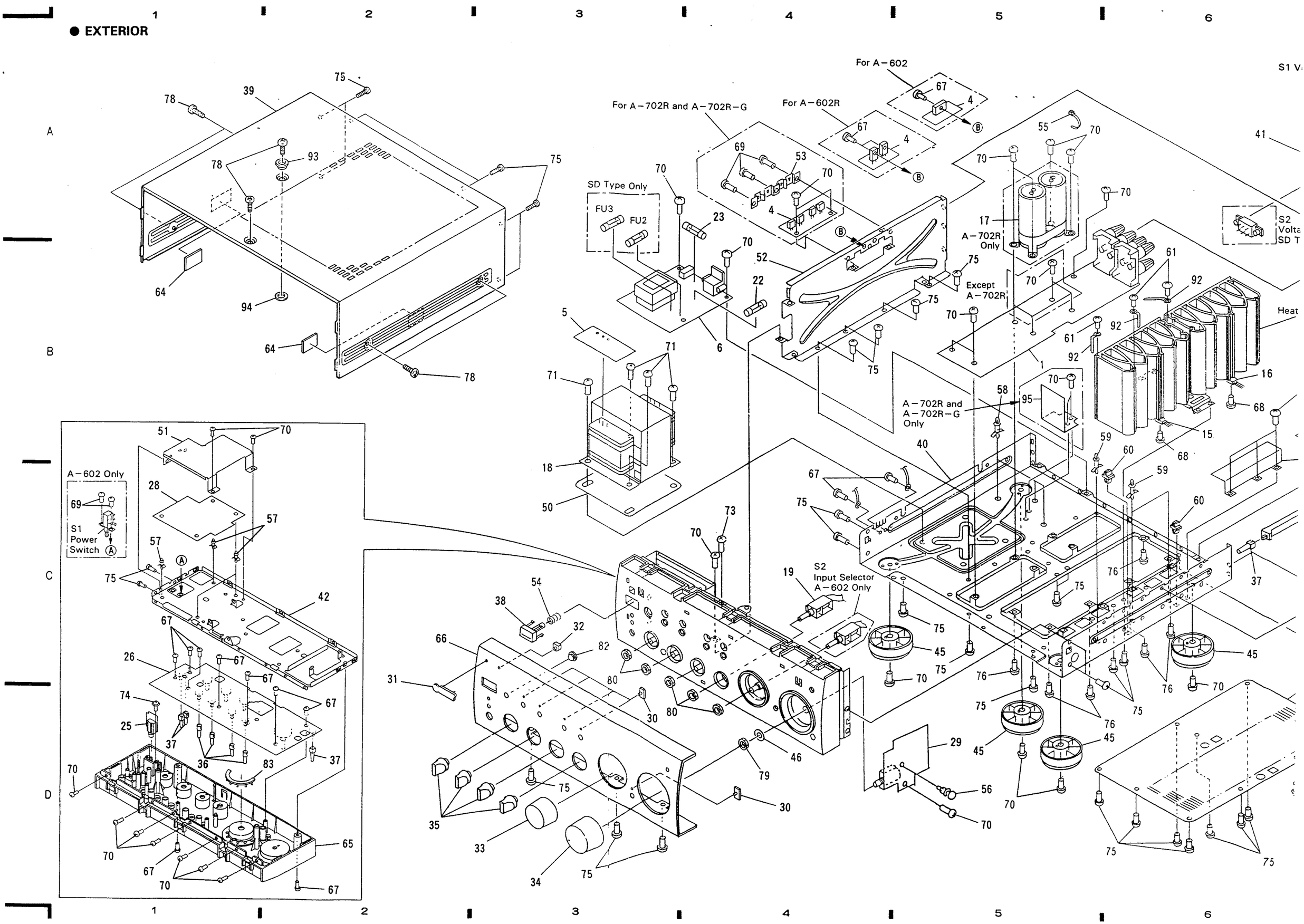
For A-602
For A-702R and A-702R-G
For A-602R
SD Type Only
FU3
FU2
A-702R Only
Except A-702R
A-702R and A-702R-G Only
A-602 Only
S1 Power Switch
S2 Input Selector A-602 Only
S2 Volta SD T
Heat

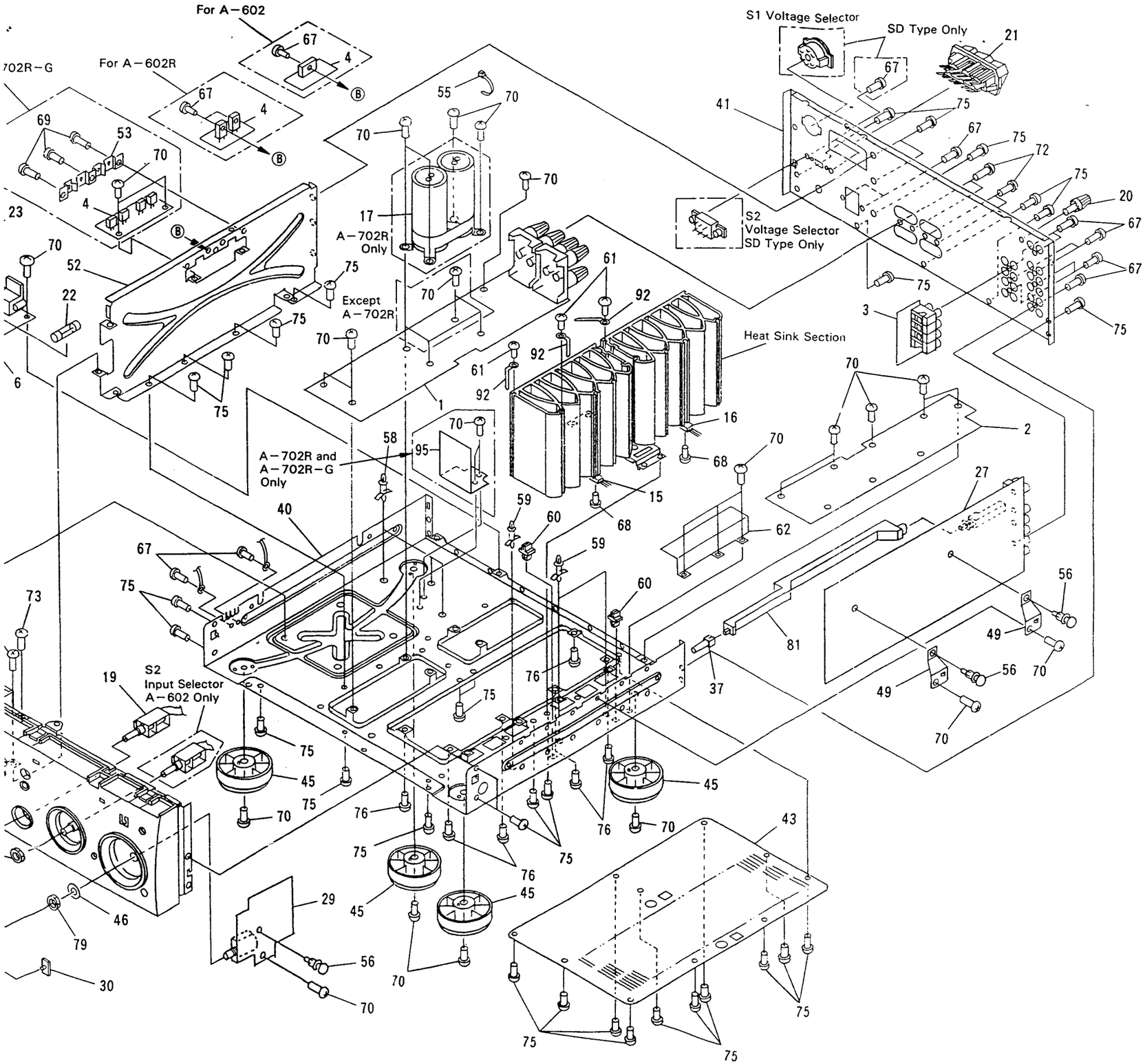

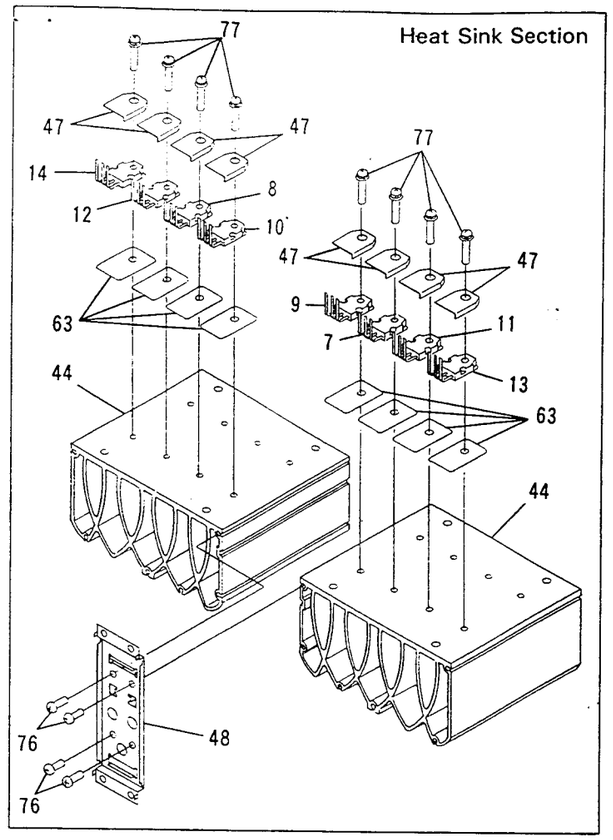

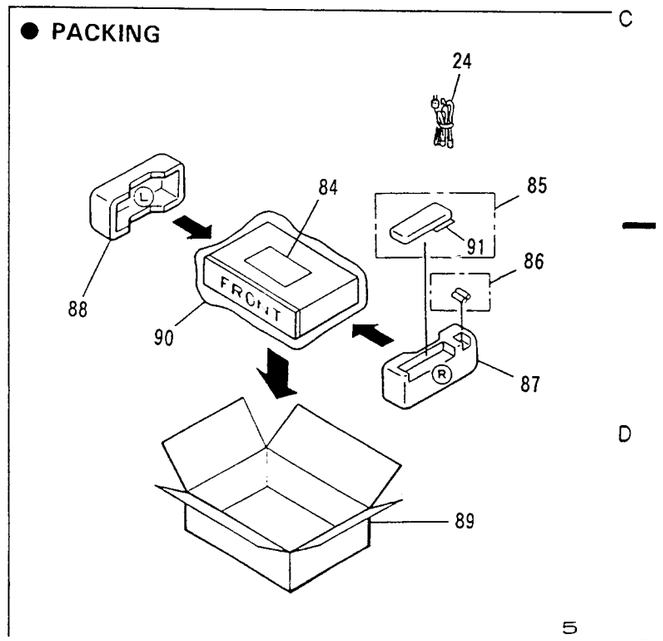

NOTE : Screws adjacent to ▼ mark on the product are used for disassembly.

2. DISASSEMBLY

■ FRONT PANEL SECTION (See Fig. 2−1)

1. Remove the metal bonnet.
   Remove screws : Top side ×2, L/R side ×4,
   Rear side ×6
2. Remove the front panel.
   a. screw ① ×3
   b. Hooks : Section ⓐ ×1, Section ⓑ ×3

Note :
Double sided tape is set between the surfaces of the front panel and the panel base, therefore, apply a slight force when removing.

3. Remove the push joint from the switch (S101) of INPUT assy.
4. Remove the flat cable ⓒ from the connector (CN10) of INPUT assy.
5. Cut binder (AEC−093) holding the coiled flat cable ⓓ from the connector (CN7) of POWER AMP assy.

Note :
When installing the panel section, coil the flat cable and fasten with the binder.

6. Remove the lead wire ⓔ from the HEADPHONE assy. (Screw ② ×1)
7. Remove the rotary knob L (VOLUME) and the nut.
8. Remove the rotary knob S (REC SELECTOR) and the nut.
9. Remove the rotary knob M (INPUT SELECTOR) and the nut. (A−602 only)
10. Remove the screw ③ ×7 from the top side of the panel base.
11. Remove the screw ④ ×2 which fasten the panel stay and the panel base.
12. Push down the hook ⓕ ×2 of the panel base, and free the panel base.

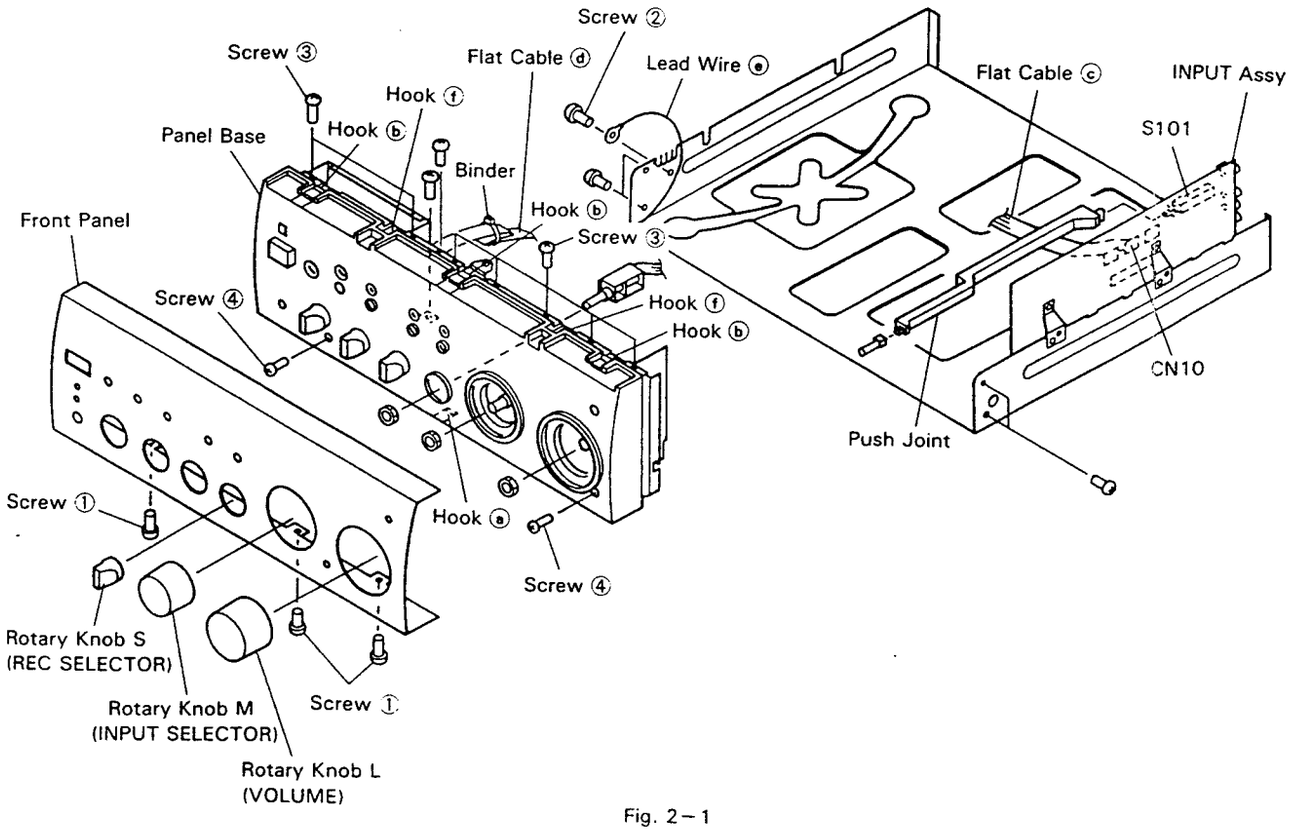

Fig. 2−1

3. BLOCK DIAGRAM

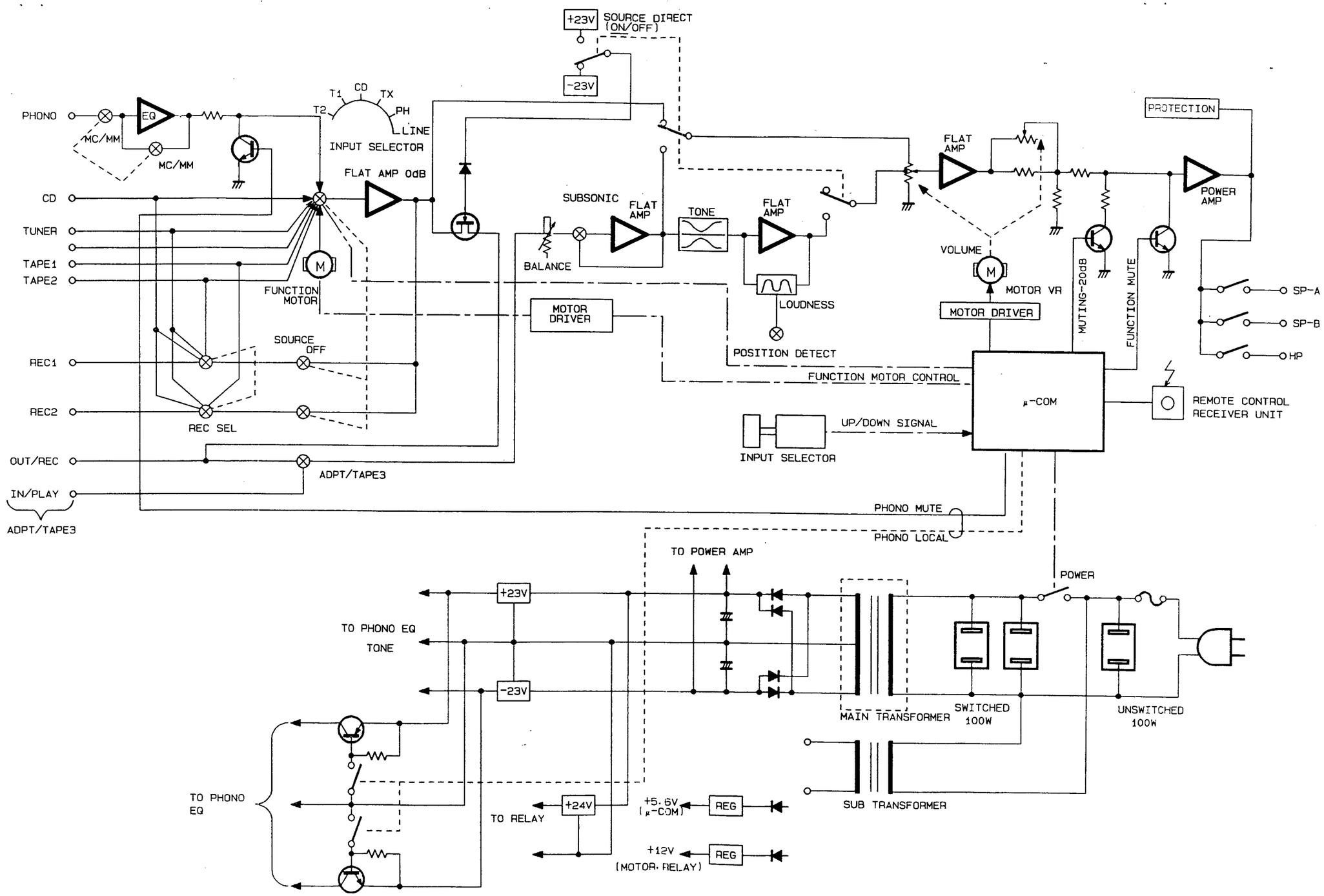

4.2 INPUT ASSY AND REC OUT ASSY

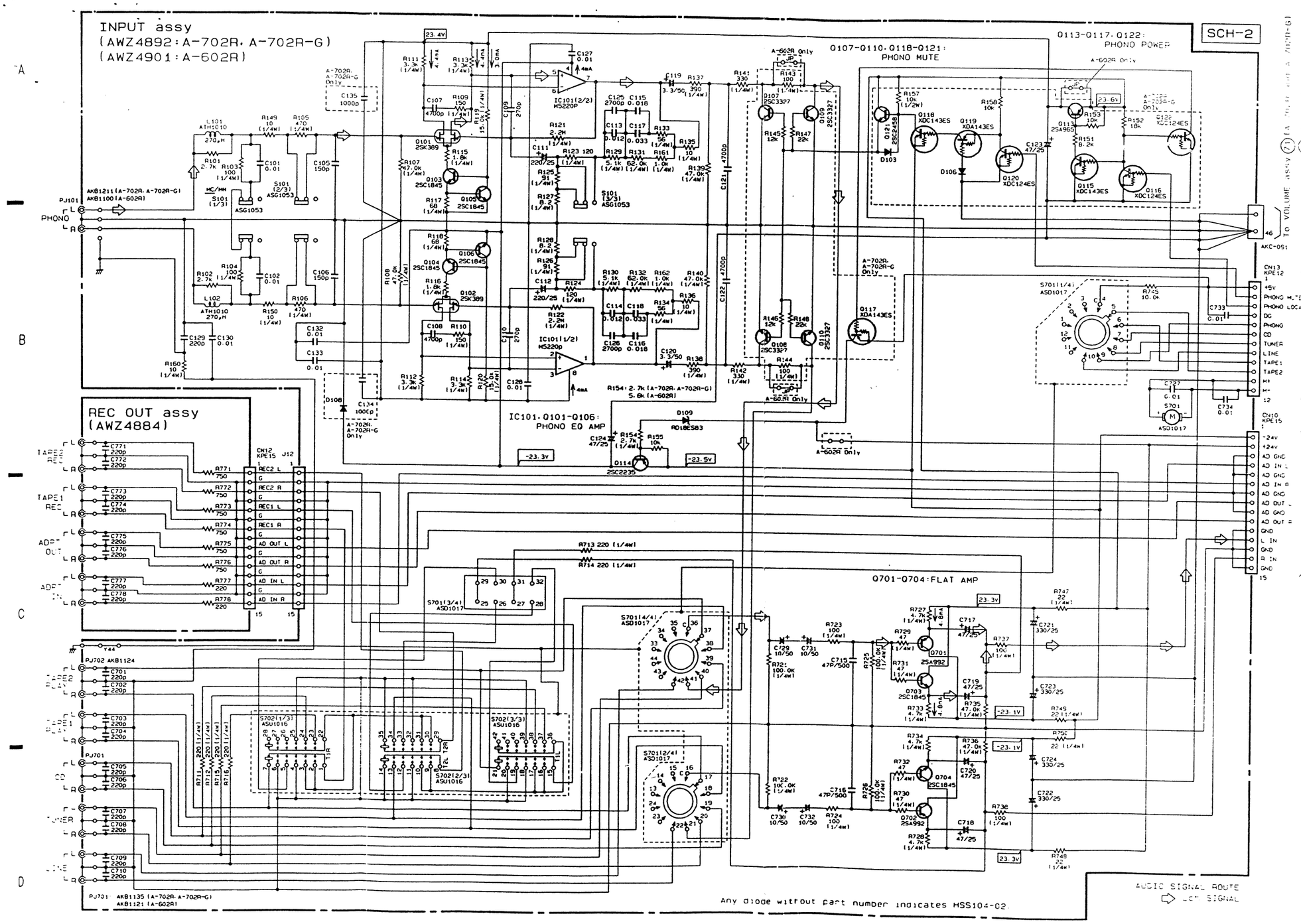

Note: (Type 1)

1. When ordering service parts, be sure to refer to "PARTS LIST OF EXPLODED VIEWS" or "PCB PARTS LIST".
2. Since these are basic circuits, some parts of them or the values of some components may be changed for improvement.
3. RESISTORS:
   Unit: k kΩ, M MΩ, or Ω unless otherwise noted.
   Rated power: 1/4W, 1/6W, 1/8W, 1/10W unless otherwise noted.
   Tolerance: (F): ±1%, (G): ±2%, (K): ±10%, (M): ±20% or ±5% unless otherwise noted.
4. CAPACITORS:
   Unit: p pF or uF unless otherwise noted.
   Ratings: capacitor (uF)/ voltage (V) unless otherwise noted.
   Rated voltage: 50V except for electrolytic capacitors.
5. COILS:
   Unit: m mH or μH unless otherwise noted.
6. VOLTAGE AND CURRENT:
   V : Signal voltage at rated output.
   V : DC voltage (V) at no input signal unless otherwise noted. Value in ( ) is DC voltage at rated power.
   ⇔ mA or – mA : DC current at no input signal unless otherwise noted.
7. OTHERS:
   • ➡ : Signal route.
   • ⊕ : Adjusting point.
   • ▼ (Red) : Measurement point.
   • The Δ mark found on some component parts indicates the importance of the safety factor of the parts. Therefore, when replacing, be sure to use parts of identical designation.
8. SWITCHES (Underline indicates switch position):

S3	REC SELECTOR
TONE assy	
S601	ADPT/TAPE3 ON/OFF
S602	SUBSONIC ON/OFF
S603	DIRECT ON/OFF
S604	POWER SW (EXCEPT A – 602)
S605	MUTING ON/OFF
S606	INPUT SELECTOR (EXCEPT A – 602)
S607	SPEAKERS A ON/OFF
S608	LOUDNESS ON/OFF
S609	SPEAKERS B ON/OFF
INPUT assy	
S101	PHONO MC/MM
S701	FUNCTION SW
S702	REC SW

9. For SCH-□ on the schematic diagram
   • SCH-□ indicates the drawing number of the schematic diagram.
   (SCH stands for schematic diagram.)

INPUT ASSY, REC OUT ASSY SCH-2

4. SCHEMATIC AND PCB CONNECTION DIAGRAMS

4.1 OVERALL SCHEMATIC DIAGRAM

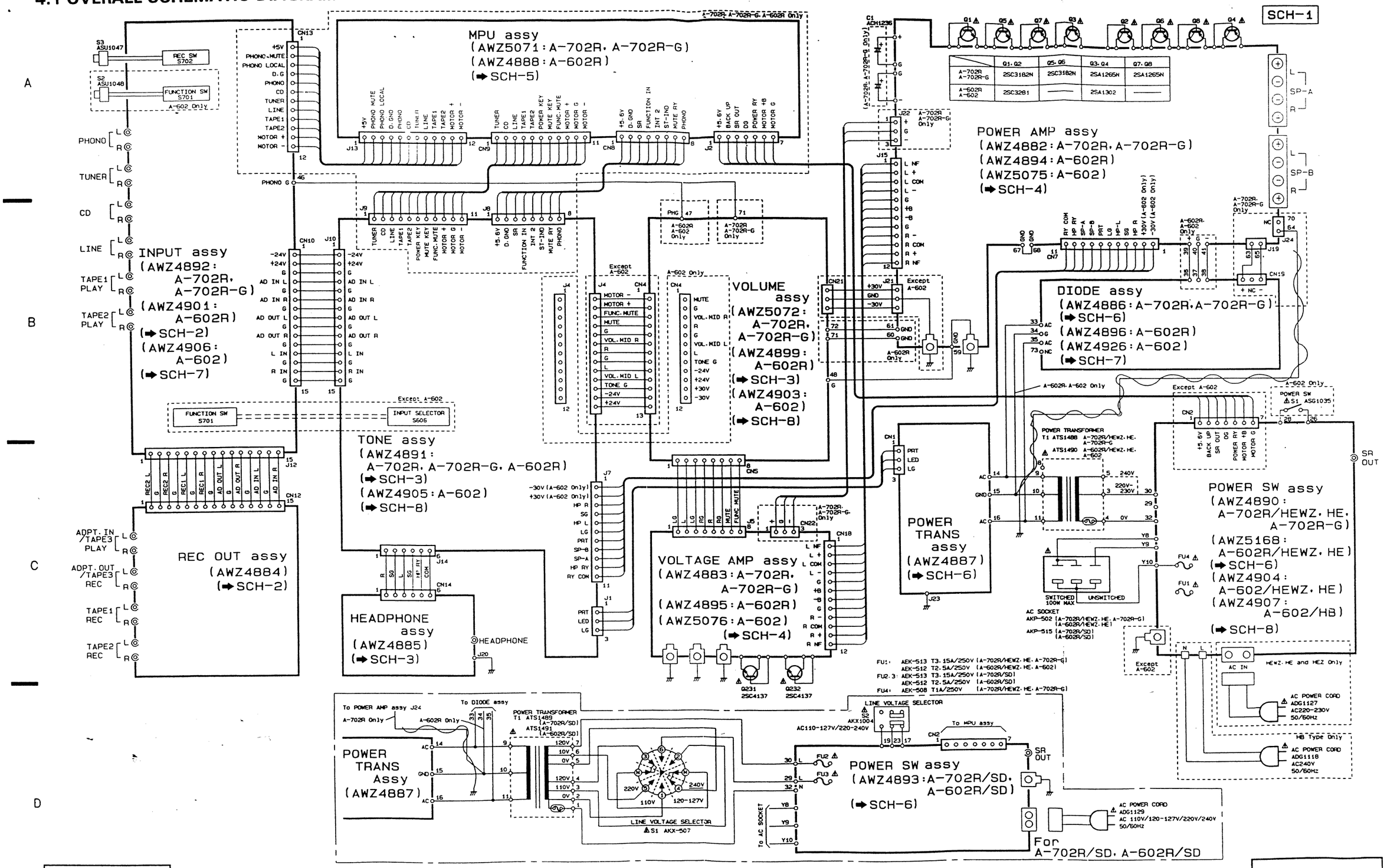

POWER AMP assy

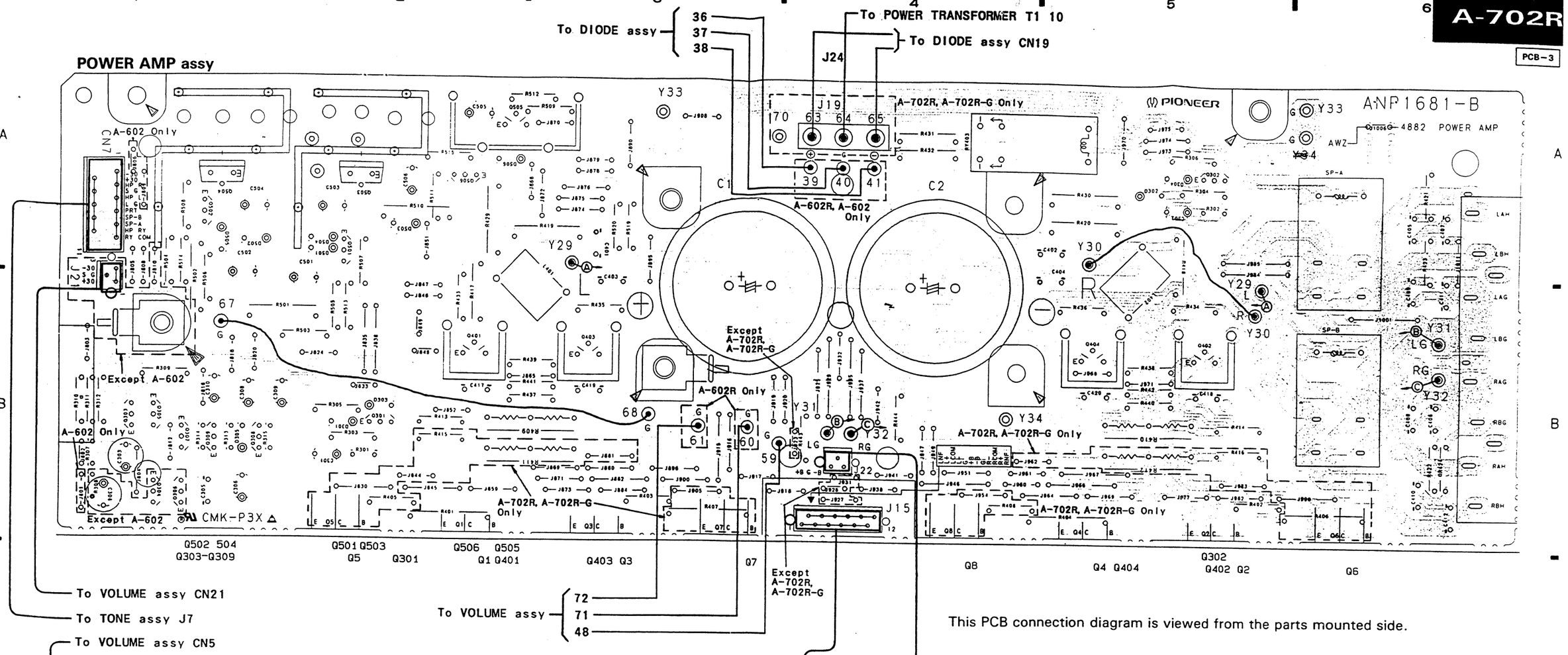

This PCB connection diagram is viewed from the parts mounted side.

VOLTAGE AMP assy

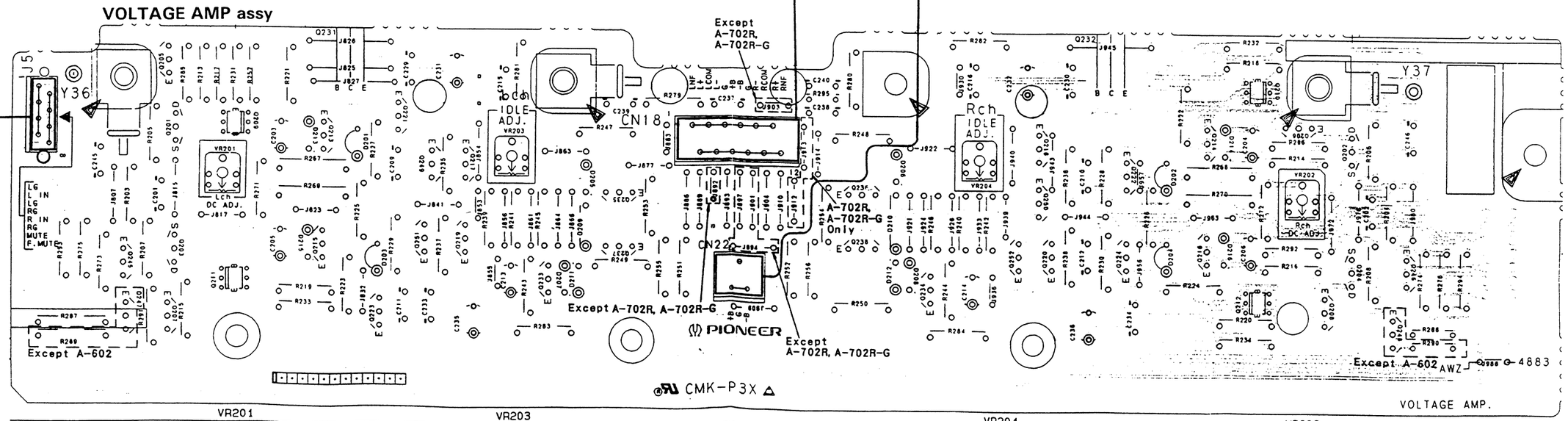

This PCB connection diagram is viewed from the parts mounted side.

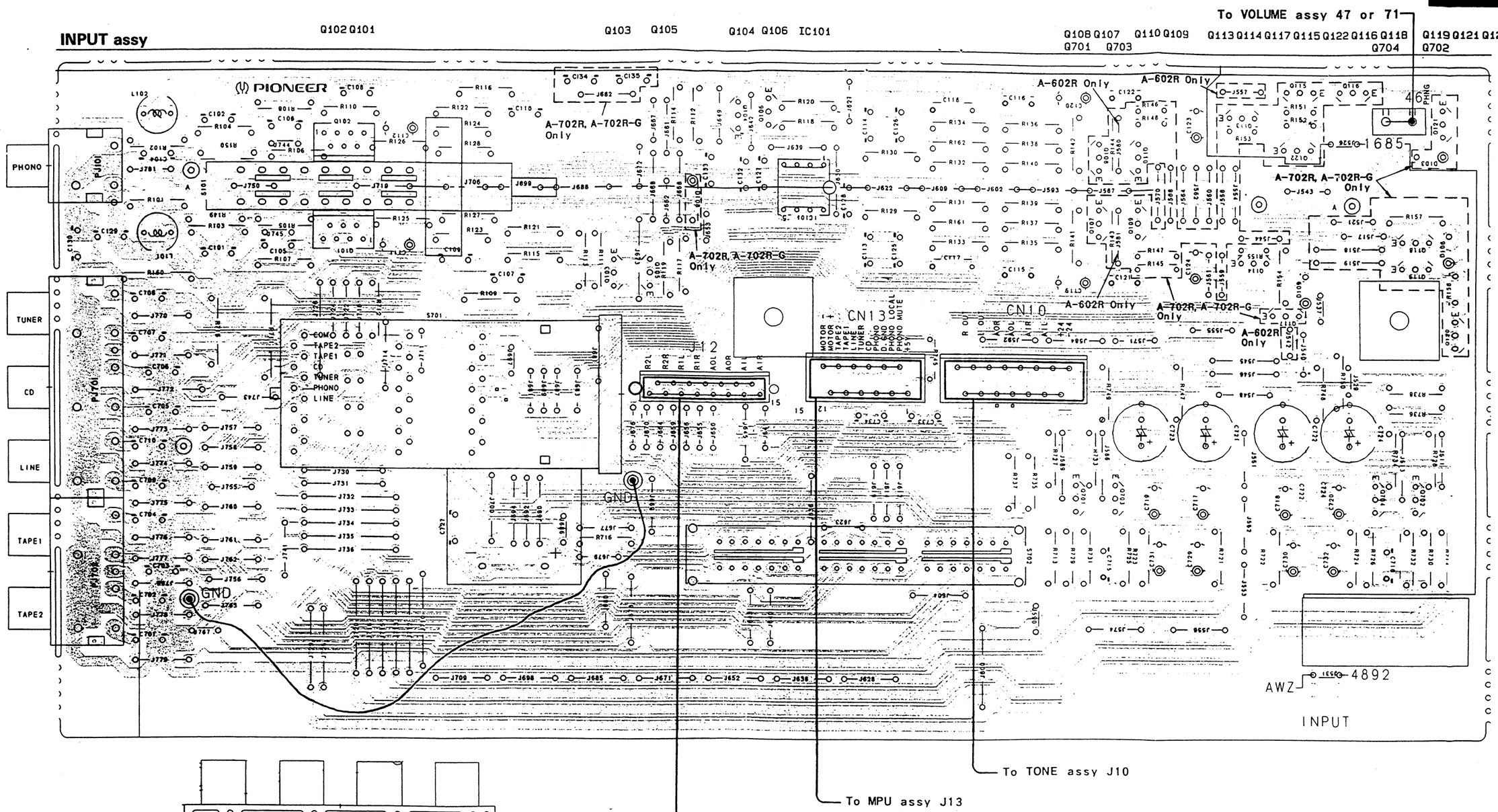

NOTE

1. This P.C.B connection diagram is viewed from the parts mounted side.
2. The parts which have been mounted on the board can be replaced with those shown with the corresponding wiring symbols listed in the following Table.
3. The capacitor terminal marked with ◎(double circles) shows negatine terminal.
4. The diode terminal marked with ◎(double circles) shows cathode side.
5. The transistor terminal to which E is affixed shows the emitter.

P.C.B. pattern diagram indication	Corresponding part symbol	Part Name
Q504 E	E or E	Transistor
Q215	or	Radiator type transistor
D203	D203	Diode

P.C.B. pattern diagram indication	Corresponding part symbol	Part Name
R237	R237	Resistor
C513	+	Capacitor (Polarized)
C518		Capacitor (Non-polarized)

Others

P.C.B. pattern diagram indication	Part Name
IC	IC
S	Switch
RY	Relay

P.C.B. pattern diagram indication	Part Name
L	Coil
F	Filter
VR	Variable resistor or Semi-fixed resistor

4.3 TONE ASSY, VOLUME ASSY AND HEADPHONE ASSY

This PCB connection diagram is viewed from the parts mounted side.

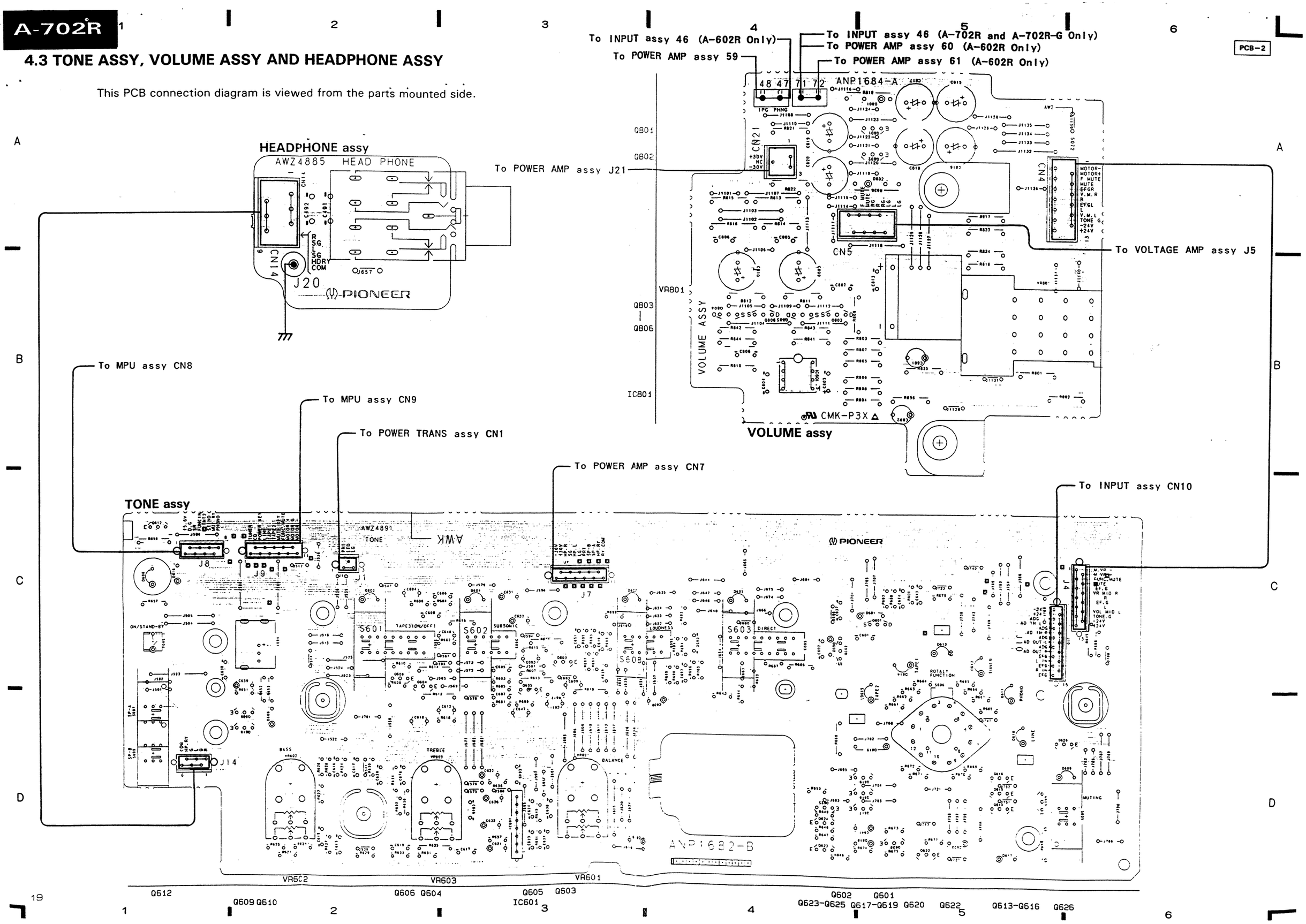

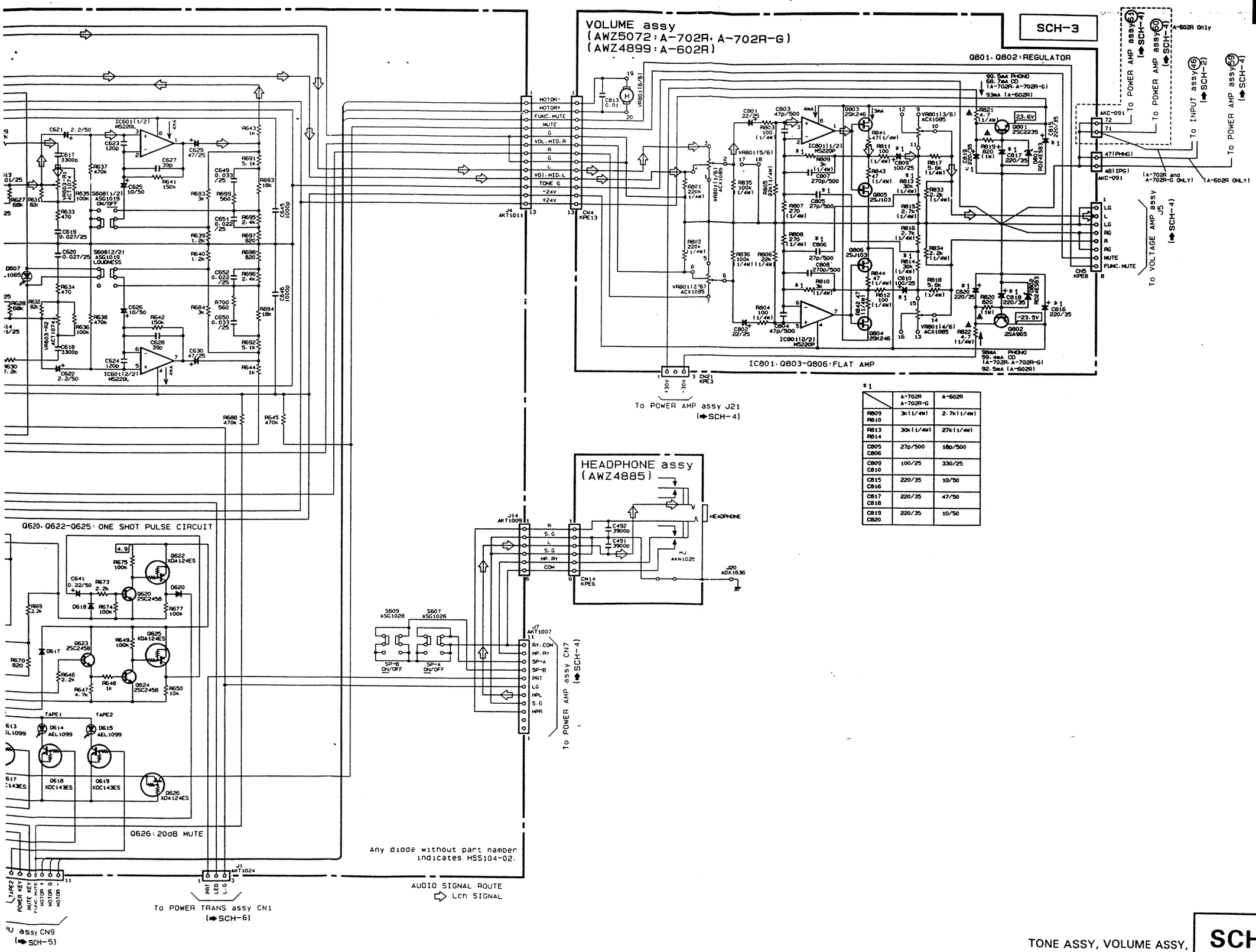

*1

	A-702R A-702R-G	A-602R
R809 R810	3k(1/4W)	2.7k(1/4W)
R813 R814	30k(1/4W)	27k(1/4W)
C805 C806	27p/500	18p/500
C809 C810	100/25	330/25
C815 C816	220/35	10/50
C817 C818	220/35	47/50
C819 C820	220/35	10/50

TONE ASSY, VOLUME ASSY, HEADPHONE ASSY

SCH-3

23

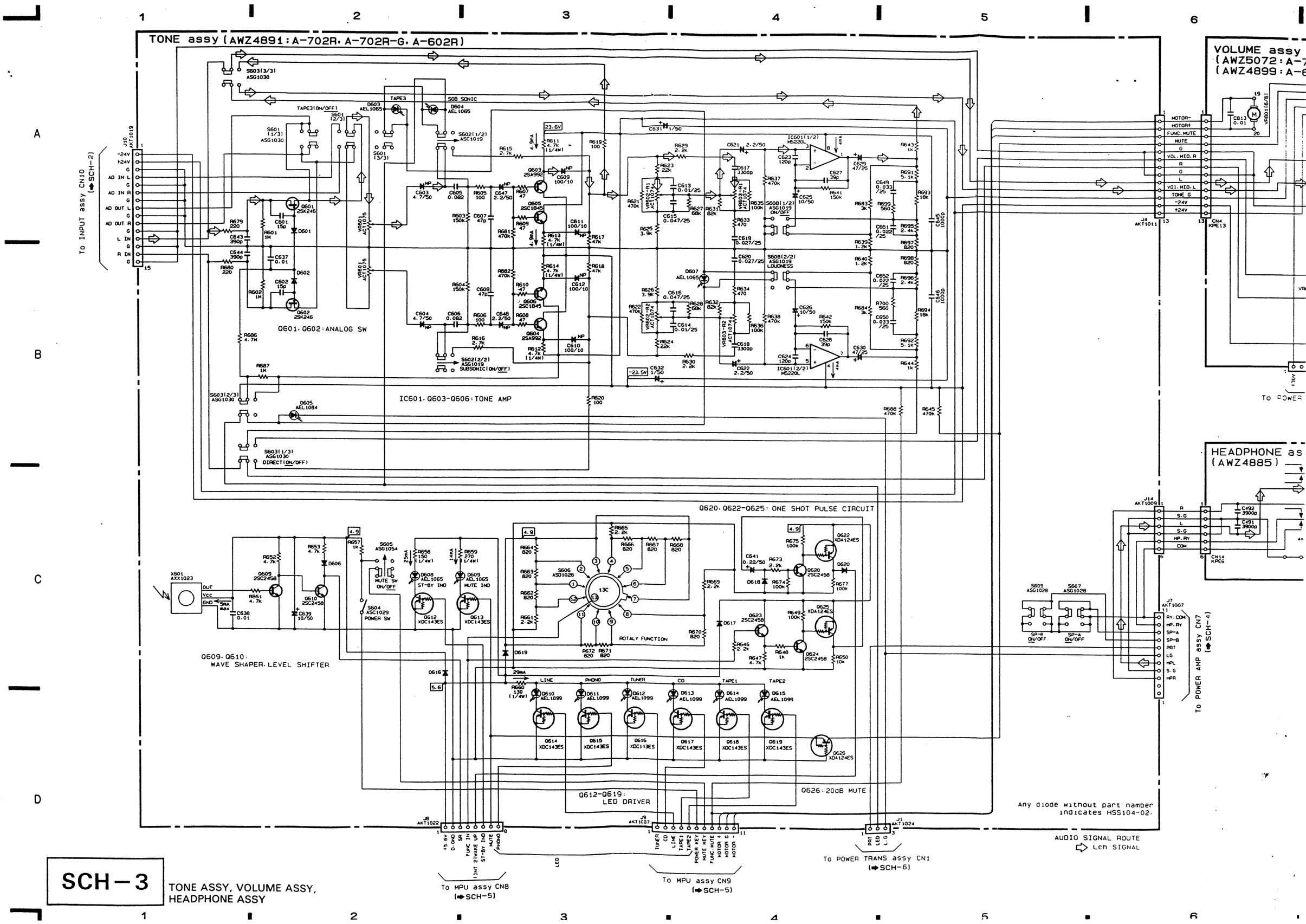

SCH−3 TONE ASSY, VOLUME ASSY, HEADPHONE ASSY

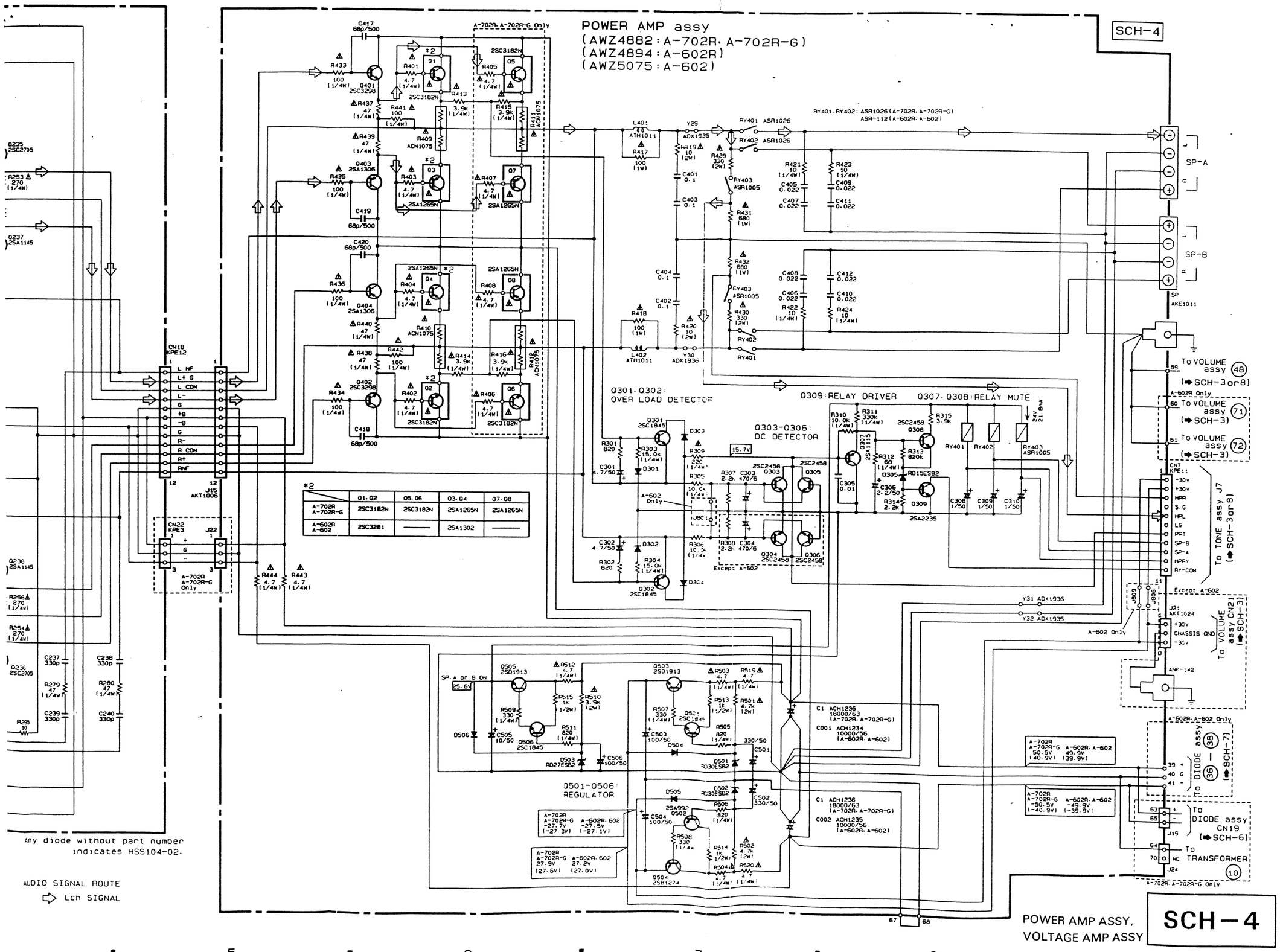

*2	Q1, Q2	Q5, Q6	Q3, Q4	Q7, Q8
A-702R, A-702R-G	2SC3182N	2SC3182N	2SA1265N	2SA1265N
A-602R, A-602	2SC3281	—	2SA1302	—

4.4 POWER AMP ASSY AND VOLTAGE AMP ASSY

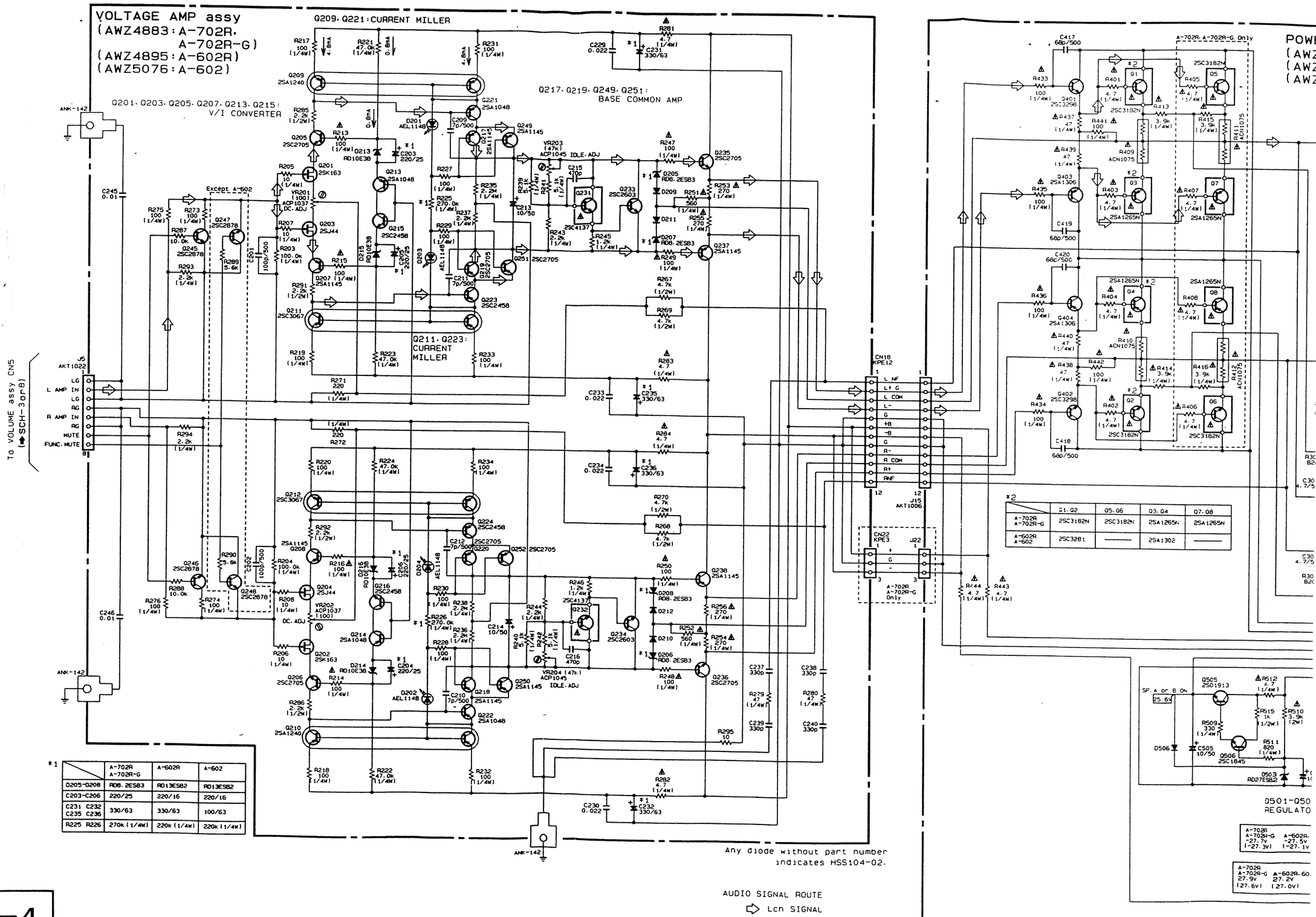

	Q1, Q2	Q5, Q6	Q3, Q4	Q7, Q8
A-702R / A-702R-G	2SC3182N	2SC3182N	2SA1265N	2SA1265N
A-602R / A-602	2SC3281	———	2SA1302	———

*2

	A-702R / A-702R-G	A-602R	A-602
D205-D208	RD8.2ES83	RD13ES82	RD13ES82
C203-C206	220/25	220/16	220/16
C231 C232 C235 C236	330/63	330/63	100/63
R225 R226	270k (1/4W)	220k (1/4W)	220k (1/4W)

*1

SCH-4

POWER AMP ASSY, VOLTAGE AMP ASSY

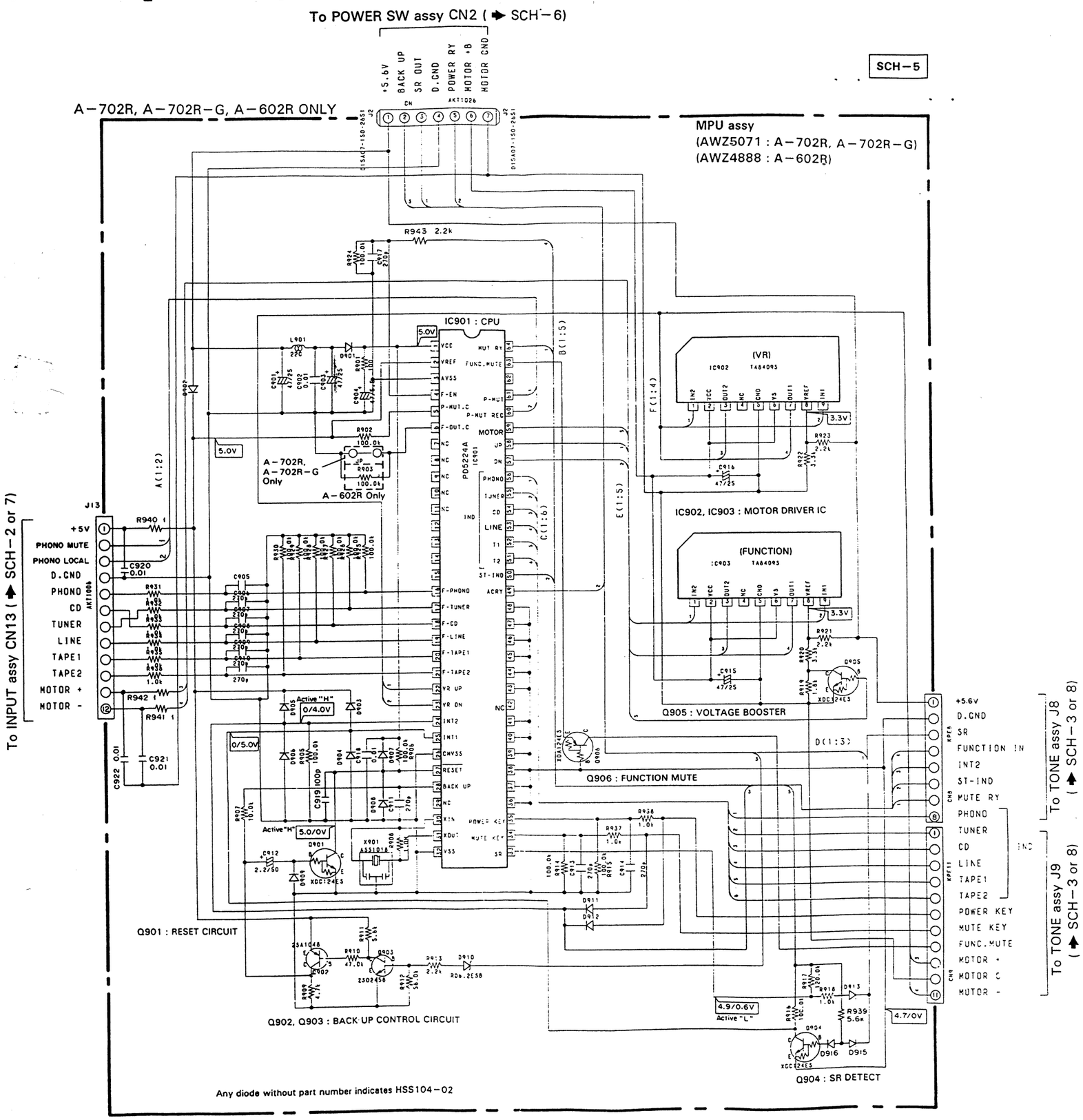
To POWER SW assy CN2 (➔ SCH-6)
+5.6V
BACK UP
SR OUT
D.GND
POWER RY
MOTOR +B
MOTOR GND
SCH-5
A-702R, A-702R-G, A-602R ONLY
MPU assy
(AWZ5071 : A-702R, A-702R-G)
(AWZ4888 : A-602R)
R943 2.2k
IC901 : CPU
PD5224A
IC901
5.0V
A-702R, A-702R-G Only
A-602R Only
(VR)
IC902 TA84093
3.3V
IC902, IC903 : MOTOR DRIVER IC
(FUNCTION)
IC903 TA84093
Q905 : VOLTAGE BOOSTER
Q906 : FUNCTION MUTE
Q901 : RESET CIRCUIT
Q902, Q903 : BACK UP CONTROL CIRCUIT
Q904 : SR DETECT
To INPUT assy CN13 (➔ SCH-2 or 7)
J13
+5V
PHONO MUTE
PHONO LOCAL
D.GND
PHONO
CD
TUNER
LINE
TAPE1
TAPE2
MOTOR +
MOTOR -
+5.6V
D.GND
SR
FUNCTION IN
INT2
ST-IND
MUTE RY
PHONO
TUNER
CD
LINE
TAPE1
TAPE2
POWER KEY
MUTE KEY
FUNC.MUTE
MOTOR +
MOTOR C
MOTOR -
To TONE assy J8 (➔ SCH-3 or 8)
To TONE assy J9 (➔ SCH-3 or 8)
Any diode without part number indicates HSS104-02

4.6 POWER SW ASSY, POWER TRANS ASSY AND DIODE ASSY

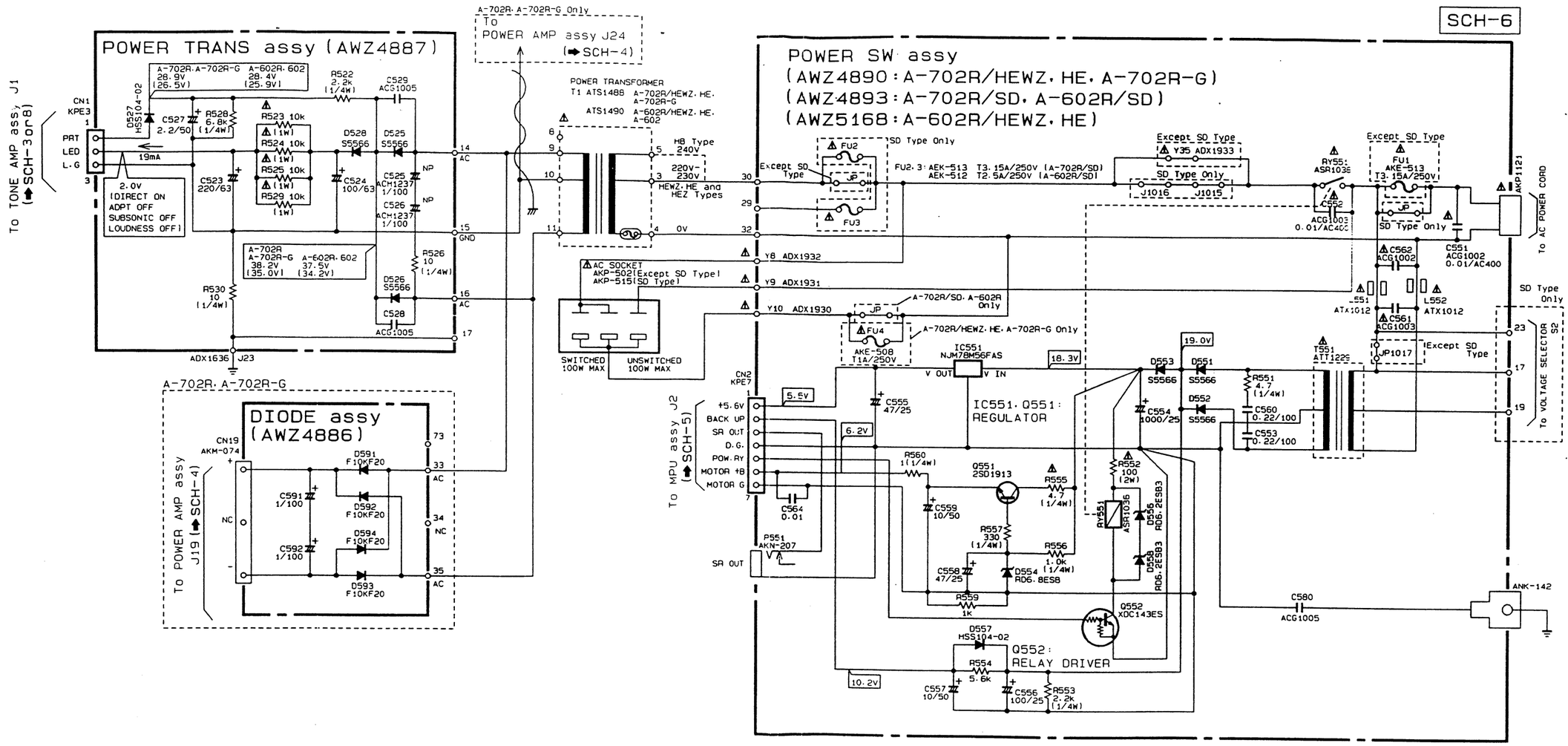

Line Voltage Selection

Line voltage can be changed with the following steps.

1. Disconnect the AC Power cord.
2. Remove the top cover.
3. Change the connection with the power transformer (T1) primary taps.
4. Stick the line voltage label on the rear panel.

Part No.	Description
AAX−193	220V label
AAX−192	240V label

POWER SW ASSY, POWER TRANS ASSY, DIODE ASSY SCH−6

7. FOR A−702R/HE, SD, A−702R−G/HEZ, A−602R/HEWZ, HE, SD, A−602/HEWZ, HE AND HB

NOTES :

- *Parts marked by "NSP" are generally unavailable because they are not in our Master Spare Parts List.*
- *The ⚠ mark found on some component parts indicates the importance of the safety factor of the part. Therefore, when replacing, be sure to use parts of identical designation.*
- *Parts marked by "◉" are not always kept in stock. Their delivery time may be longer than usual or they may be unavailable.*

7.1 CONTRAST OF MISCELLANEOUS PARTS

A−702R/HE, SD, A−702R−G/HEZ, A−602R/HEWZ, HE, SD, A−602/HEWZ, HE, HB and A−702R/HEWZ have the same construction except for the following :

Mark	Symbol & Description	Part No.										Remarks
		A−702R			A−702R−G	A−602R			A−602			
		HEWZ	HE	SD	HEZ	HEWZ	HE	SD	HEWZ	HE	HB	
NSP	AF assy	AWK1684	AWK1684	AWK1686	AWK1684	AWK1687	AWK1687	AWK1689	AWK1690	AWK1690	AWK1692	
	POWER AMP assy	AWZ4882	AWZ4882	AWZ4882	AWZ4882	AWZ4894	AWZ4894	AWZ4894	AWZ5075	AWZ5075	AWZ5075	
	VOLTAGE AMP assy	AWZ4883	AWZ4883	AWZ4883	AWZ4883	AWZ4895	AWZ4895	AWZ4895	AWZ5076	AWZ5076	AWZ5076	
	DIODE assy	AWZ4886	AWZ4886	AWZ4886	AWZ4886	AWZ4896	AWZ4896	AWZ4896	AWZ4926	AWZ4926	AWZ4926	
	POWER SW assy	AWZ4890	AWZ4890	.....	AWZ4890	AWZ5168	AWZ5168	.....	AWZ4904	AWZ4904	.....	
NSP	POWER SW assy	.....	.....	AWZ4893	.....	.....	.....	AWZ4893	.....	.....	AWZ4907	
	VOLUME assy	.....	.....	.....	.....	.....	.....	.....	AWZ4903	AWZ4903	AWZ4903	
NSP	INPUT assy	AWK1685	AWK1685	AWK1685	AWK1685	AWK1688	AWK1688	AWK1688	AWK1691	AWK1691	AWK1691	
	TONE assy	AWZ4891	AWZ4891	AWZ4891	AWZ4891	AWZ4891	AWZ4891	AWZ4891	AWZ4905	AWZ4905	AWZ4905	
	INPUT assy	AWZ4892	AWZ4892	AWZ4892	AWZ4892	AWZ4901	AWZ4901	AWZ4901	AWZ4906	AWZ4906	AWZ4906	
NSP	COMPLEX CONTROL assy	AWP1050	AWP1050	AWP1050	AWP1050	AWP1047	AWP1047	AWP1047	.....	.....	.....	
	MPU assy	AWZ5071	AWZ5071	AWZ5071	AWZ5071	AWZ4888	AWZ4888	AWZ4888	.....	.....	.....	
	VOLUME assy	AWZ5072	AWZ5072	AWZ5072	AWZ5072	AWZ4899	AWZ4899	AWZ4899	.....	.....	.....	
⚠	Q1, Q2	2SC3182N	2SC3182N	2SC3182N	2SC3182N	2SC3281	2SC3281	2SC3281	2SC3281	2SC3281	2SC3281	
⚠	Q5, Q6	2SC3182N	2SC3182N	2SC3182N	2SC3182N	.....	.....	.....	.....	.....	.....	
⚠	Q3, Q4	2SA1265N	2SA1265N	2SA1265N	2SA1265N	2SA1302	2SA1302	2SA1302	2SA1302	2SA1302	2SA1302	
⚠	Q7, Q8	2SA1265N	2SA1265N	2SA1265N	2SA1265N	.....	.....	.....	.....	.....	.....	
⚠	S1 Voltage selector (AC110V/120−127V/220V/240V)	.....	.....	AKX−507	.....	.....	.....	AKX−507	.....	.....	.....	Refer to page 4.
⚠	S2 Voltage selector (AC110−127V/220V−240V)	.....	.....	AKX1004	.....	.....	.....	AKX1004	.....	.....	.....	Refer to page 4.
⚠	S1 (Power switch)	.....	.....	.....	.....	.....	.....	.....	ASG1035	ASG1035	ASG1035	Refer to page 4.
	S2 (Input selector)	.....	.....	.....	.....	.....	.....	.....	ASU1048	ASU1048	ASU1048	Refer to page 4.
⚠	T1 Power transformer (AC220−230V/240V)	ATS1488	ATS1488	.....	ATS1488	ATS1490	ATS1490	.....	ATS1490	ATS1490	ATS1490	
⚠	T1 Power transformer (AC110V/120−127V/220V/240V)	.....	.....	ATS1489	.....	.....	.....	ATS1491	.....	.....	.....	
⚠	C1 (18000μ/63V)	ACH1236	ACH1236	ACH1236	ACH1236	.....	.....	.....	.....	.....	.....	
⚠	FU1 Fuse (T3.15A/250V)	AEK−513	AEK−513	.....	AEK−513	.....	.....	.....	.....	.....	.....	
⚠	FU1 Fuse (T2.5A/250V)	.....	.....	.....	.....	AEK−512	AEK−512	.....	AEK−512	AEK−512	AEK−512	
⚠	FU2, FU3 Fuse (T3.15A/250V)	.....	.....	AEK−513	.....	.....	.....	.....	.....	.....	.....	Refer to page 3.
⚠	FU2, FU3 Fuse (T2.5A/250V)	.....	.....	.....	.....	.....	.....	AEK−512	.....	.....	.....	Refer to page 3.
⚠	FU4 Fuse (T1A/250V)	AEK−508	AEK−508	.....	AEK−508	.....	.....	.....	.....	.....	.....	
⚠	AC socket 3−P	AKP−502	AKP−502	AKP−515	AKP−502	AKP−502	AKP−502	AKP−515	.....	.....	.....	
⚠	AC power cord	ADG1127	ADG1127	ADG1129	ADG1127	ADG1127	ADG1127	ADG1129	ADG1127	ADG1127	ADG1118	
	Strain relief	.....	.....	.....	.....	.....	.....	.....	.....	.....	AEC−882	For AC power cord

Mark	Symbol & Description	Part No.										Remarks
		A−702R			A−702R−G	A−602R			A−602			
		HEWZ	HE	SD	HEZ	HEWZ	HE	SD	HEWZ	HE	HB	
	Rear panel	ANC2080	ANC2080	ANC2081	ANC2080	ANC2080	ANC2080	ANC2081	ANC2079	ANC2079	ANC2082	
	Name plate	AAM1058	AAM1058	AAM1058	AAM1059	AAM1058	AAM1058	AAM1058	AAM1058	AAM1058	AAM1058	
	Rotary knob M	AAB1344	AAB1344	AAB1344	AAB1346	AAB1344	AAB1344	AAB1344	AAB1345	AAB1345	AAB1345	
	Rotary knob L	AAB1347	AAB1347	AAB1347	AAB1348	AAB1347	AAB1347	AAB1347	AAB1347	AAB1347	AAB1347	
	Rotary knob S	AAB1367	AAB1367	AAB1367	AAB1368	AAB1367	AAB1367	AAB1367	AAB1367	AAB1367	AAB1367	
	Push knob A	AAD2430	AAD2430	AAD2430	AAD2431	AAD2430	AAD2430	AAD2430	AAD2430	AAD2430	AAD2430	
	Push knob B	AAD2432	AAD2432	AAD2432	AAD2433	AAD2432	AAD2432	AAD2432	AAD2432	AAD2432	AAD2432	
	Power knob	AAD2434	AAD2434	AAD2434	AAD2435	AAD2434	AAD2434	AAD2434	AAD2434	AAD2434	AAD2434	
	Bonnet	ANE1427	ANE1427	ANE1427	ANE1428	ANE1427	ANE1427	ANE1427	ANE1427	ANE1427	ANE1429*1	
	Top cover	.....	.....	.....	.....	.....	.....	.....	.....	.....	AME1086	*3
	Screw	.....	.....	.....	.....	.....	.....	.....	.....	.....	BPZ26P080FMC	*2
	Screw	FBT40P060FZK	FBT40P060FZK	FBT40P060FZK	FBT40P060FNI	FBT40P060FZK	FBT40P060FZK	FBT40P060FZK	FBT40P060FZK	FBT40P060FZK	FBT40P060FZK	For Bonnet
NSP	Heat sink	ANH1434	ANH1434	ANH1434	ANH1434	ANH1435	ANH1435	ANH1435	ANH1435	ANH1435	ANH1435	
	Transistor cover L	ANG1724	ANG1724	ANG1724	ANG1724	.....	.....	.....	.....	.....	.....	
NSP	Trans base	ANG1848	ANG1848	ANG1848	ANG1848	.....	.....	.....	.....	.....	.....	
NSP	Shield plate A	ANK1244	ANK1244	ANK1244	ANK1244	ANK1244	ANK1244	ANK1244	.....	.....	.....	
NSP	Diode shield	ANK1246	ANK1246	ANK1246	ANK1246	.....	.....	.....	.....	.....	.....	
	Panel base	AMB2136	AMB2136	AMB2136	AMB2137	AMB2136	AMB2136	AMB2136	AMB2138	AMB2138	AMB2138	
	Front panel	ANB1552	ANB1552	ANB1552	ANB1555	ANB1553	ANB1553	ANB1553	ANB1554	ANB1554	ANB1554	
NSP	PCB support	AEC1006	AEC1006	AEC1006	AEC1006	AEC1006	AEC1006	AEC1006	.....	.....	.....	
	Leg assy	AMR2590	AMR2590	AMR2590	AMR2590	AMR2414	AMR2414	AMR2414	AMR2414	AMR2414	AMR2414	
NSP	Shield plate	AEC1533	AEC1533	AEC1533	AEC1533	.....	.....	.....	.....	.....	.....	
NSP	Shield plate D	AEC1539	.....	.....	AEC1539	.....	.....	.....	.....	.....	.....	
	Remote sensor window	AAK2457	AAK2457	AAK2457	AAK2457	AAK2457	AAK2457	AAK2457	.....	.....	.....	
	Function lens	AAK2458	AAK2458	AAK2458	AAK2458	AAK2458	AAK2458	AAK2458	.....	.....	.....	
	Operating instructions (German)	ARC1420	.....	.....	.....	ARC1420	.....	.....	ARC1419	.....	.....	
	Operating instructions (English, French, German, Italian Dutch, Swedish, Spanish, Portuguese)	.....	ARE1277	.....	ARE1277	.....	ARE1277	.....	.....	ARE1276	.....	
	Operating instructions (English)	.....	.....	ARB1427	.....	.....	.....	ARB1427	.....	.....	ARB1440	
	Operating instructions (Spanish)	.....	.....	ARC1421	.....	.....	.....	ARB1421	.....	.....	.....	
	Remote control unit (CU−A005)	AXD1354	AXD1354	AXD1354	.....	AXD1354	AXD1354	AXD1354	.....	.....	.....	
	Remote control unit (CU−A007)	.....	.....	.....	AXD1355	.....	.....	.....	.....	.....	.....	
	Battery cover	AZA1375	AZA1375	AZA1375	AZN2243	AZA1375	AZA1375	AZA1375	.....	.....	.....	
NSP	Battery (R03, AAA)	AEX−021	AEX−021	AEX−021	AEX−021	AEX−021	AEX−021	AEX−021	.....	.....	.....	
	Packing case	AHD2534	AHD2534	AHD2537	AHD2535	AHD2532	AHD2532	AHD2536	AHD2531	AHD2531	AHD2547	
	Sub pad	.....	.....	.....	.....	.....	.....	.....	.....	.....	AHB1106	*4
NSP	Air cap	.....	.....	.....	.....	.....	.....	.....	.....	.....	AHG1087	*5

*Note) *1−*5 : Refer to "Fig. 7−1".*

List of PCB assemblies for A−602

AF assy
- POWER AMP assy
- VOLTAGE AMP assy
- REC OUT assy
- DIODE assy
- POWER TRANS assy
- POWER SW assy
- VOLUME assy

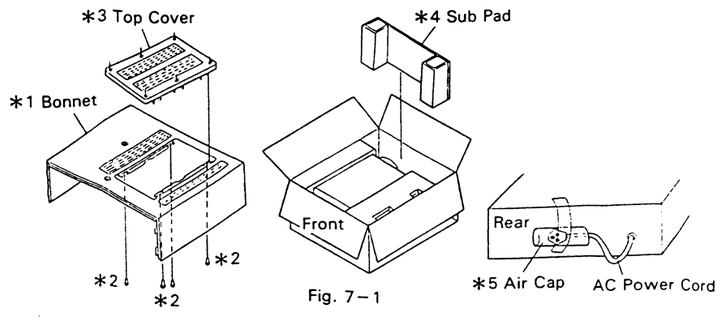

Fig. 7−1

VOLUME ASSY

AWZ4899, AWZ4903 and AWZ5072 have the same construction except for the following :

Mark	Symbol & Description	Part No.			Remarks
		AWZ5072	AWZ4899	AWZ4903	
	IC801	M5220P	M5220P	M5220L	
	C803, C804	CCCSL470K500	CCCSL470K500	CCCSL470J50	
	C805	CCCSL270K500	CCCSL180K500	CCCSL470K500	
	C806	CCCSL270K500	CCCSL180K500	CCCSL180K500	
	C809, C810	CEEA101M25	CEEA331M25	CEEA331M25	
	C813	CKCYF103Z50	CKCYF103Z50	.....	
	C815, C816, C819, C820	CEAS221M35	CEAS100M50	CEAS100M50	
	C817, C818	CEAS221M35	CEAS470M50	CEAS470M50	
	VR801 (20kΩ × 2, 30kΩ × 2 with motor)	ACX1085	ACX1085	.....	
	VR801 (20kΩ × 2, 30kΩ × 2)	.....	.....	ACT1076	
	R801, R802	RD1/4PM224J	RD1/4PM224J	RD1/8PM224J	
	R803, R804, R811, R812	RD1/4PM101J	RD1/4PM101J	RD1/8PM101J	
	R805, R806	RD1/4PM223J	RD1/4PM223J	RD1/8PM223J	
	R807, R808	RD1/4PM271J	RD1/4PM271J	RD1/8PM271J	
	R809, R810	RD1/4PM302J	RD1/4PM272J	RD1/8PM272J	
	R813, R814	RD1/4PM303J	RD1/4PM273J	RD1/8PM273J	
	R815, R816	RD1/4PM272J	RD1/4PM272J	RD1/8PM272J	
	R817, R818	RD1/4PM562J	RD1/4PM562J	RD1/8PM562J	
	R833, R834	RD1/4PM222J	RD1/4PM222J	RD1/8PM222J	
	R835, R836	RD1/4PM104J	RD1/4PM104J	RD1/8PM104J	
	R841−R844	RD1/4PM470J	RD1/4PM470J	RD1/8PM470J	
	CN4	KPE13	KPE13	KPE12	
	CN21	KPE3	KPE3	.....	

POWER AMP ASSY

AWZ4894, AWZ5075 and AWZ4882 have the same construction except for the following :

Mark	Symbol & Description	Part No.			Remarks
		AWZ4882	AWZ4894	AWZ5075	
	Q304, Q306	2SC2458	2SC2458	.....	
	RY401, RY402	ASR1026	ASR−112	ASR−112	
	C1 (10000μ/56V)	.....	ACH1234	ACH1234	
	C2 (10000μ/56V)	.....	ACH1235	ACH1235	
	C304	CEAS471M6	CEAS471M6	.....	
	R308	RD1/8PM222J	RD1/8PM222J	.....	
⚠	R405−R408	RFA1/4PS4R7J	.....	.....	
⚠	R411, R412 (0.22, 5W)	ACN1075	.....	.....	
⚠	R415, R416	RD1/4PMFL392J	.....	.....	

POWER SW ASSY

AWZ4893, AWZ5168, AWZ4904, AWZ4907 and AWZ4890 have the same construction except for the following :

Mark	Symbol & Description	Part No.					Remarks
		AWZ4890	AWZ4893	AWZ5168	AWZ4904	AWZ4907	
	IC551	NJM78M56FAS	NJM78M56FAS	NJM78M56FAS	.....	.....	
	Q551	2SD1913	2SD1913	2SD1913	.....	.....	
	Q552	XDC143ES	XDC143ES	XDC143ES	.....	.....	
	D551−D553	S5566	S5566	S5566	.....	.....	
	D554	RD6.8ESB	RD6.8ESB	RD6.8ESB	.....	.....	
	D556, D558	RD6.2ESB3	RD6.2ESB3	RD6.2ESB3	.....	.....	
	D557	HSS104−02	HSS104−02	HSS104−02	.....	.....	
⚠	RY551	ASR1036	ASR1036	ASR1036	.....	.....	
⚠	L551, L552	ATX1012	ATX1012	ATX1012	.....	.....	
⚠	T551	ATT1229	ATT1229	ATT1229	.....	.....	
	C553, C560	CQMXA224J100	CQMXA224J100	CQMXA224J100	.....	.....	
	C554	CEAS102M25	CEAS102M25	CEAS102M25	.....	.....	
	C555, C558	CEAS470M25	CEAS470M25	CEAS470M25	.....	.....	
	C556	CEAS101M25	CEAS101M25	CEAS101M25	.....	.....	
	C557, C559	CEAS100M50	CEAS100M50	CEAS100M50	.....	.....	
⚠	C561 (0.01/400V)	ACG1003	ACG1003	ACG1003	.....	.....	
⚠	C562 (0.01/400V)	ACG1002	ACG1002	ACG1002	.....	.....	
	C564	CKCYF103Z50	CKCYF103Z50	CKCYF103Z50	.....	.....	
	C580 (0.01/150V)	ACG1005	ACG1005	ACG1005	.....	.....	
	R551	RD1/4PM470J	RD1/4PM470J	RD1/4PM470J	.....	.....	
⚠	R552	RS2LMF101J	RS2LMF101J	RS2LMF101J	.....	.....	
	R553	RD1/4PM222J	RD1/4PM222J	RD1/4PM222J	.....	.....	
	R554	RD1/8PM562J	RD1/8PM562J	RD1/8PM562J	.....	.....	
⚠	R555	RFA1/4PS4R7J	RFA1/4PS4R7J	RFA1/4PS4R7J	.....	.....	
	R556	RD1/4PM102J	RD1/4PM102J	RD1/4PM102J	.....	.....	
	R557	RD1/4PM331J	RD1/4PM331J	RD1/4PM331J	.....	.....	
	R559	RD1/8PM102J	RD1/8PM102J	RD1/8PM102J	.....	.....	
	R560	RD1/4PM010J	RD1/4PM010J	RD1/4PM010J	.....	.....	
	Mini jack	AKN−207	AKN−207	AKN−207	.....	.....	
	CN2	KPE7	KPE7	KPE7	.....	.....	
⚠	AC Inlet (1P)	AKP1121	AKP1121	AKP1121	AKP1121	.....	

MPU ASSY

AWZ4888 and AWZ5071 have the same construction except for the following :

Mark	Symbol & Description	Part No.		Remarks
		AWZ5071	AWZ4888	
	R903	.....	RD1/8PM104J	

7.2 SCHEMATIC DIAGRAMS AND PCB PATTERNS

7.2.1 INPUT Assy and DIODE Assy

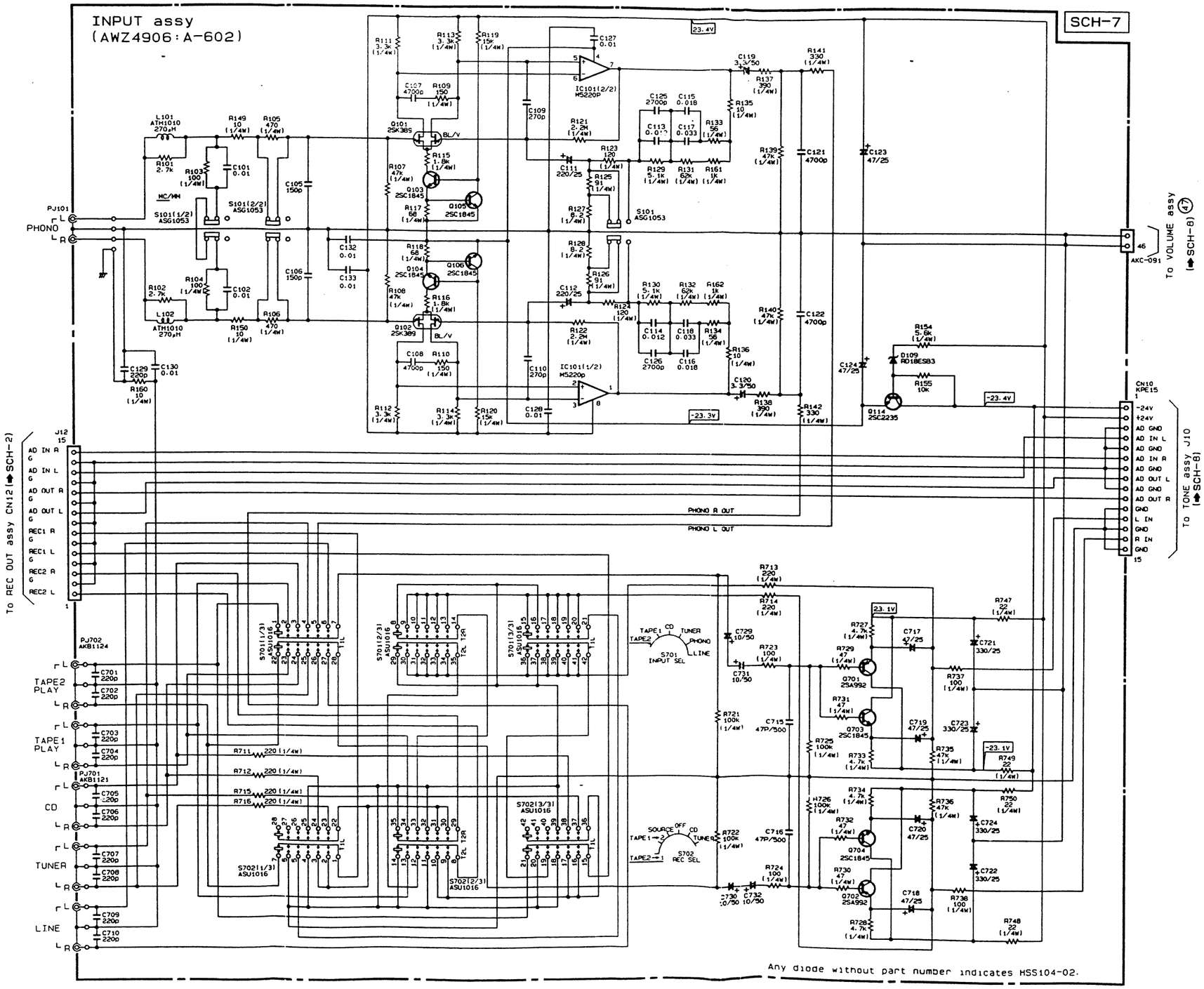

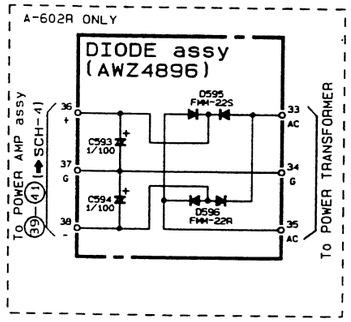

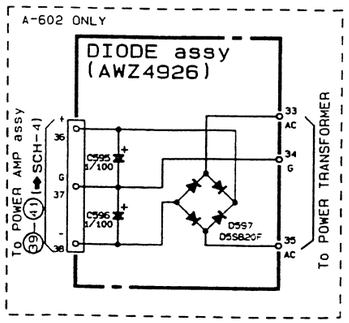

SCH-7

INPUT ASSY, DIODE ASSY

INPUT ASSY, DIODE ASSY

SCH-7

This PCB connection diagram is viewed from the parts mounted side.

PCB-6

INPUT assy (for A−602)

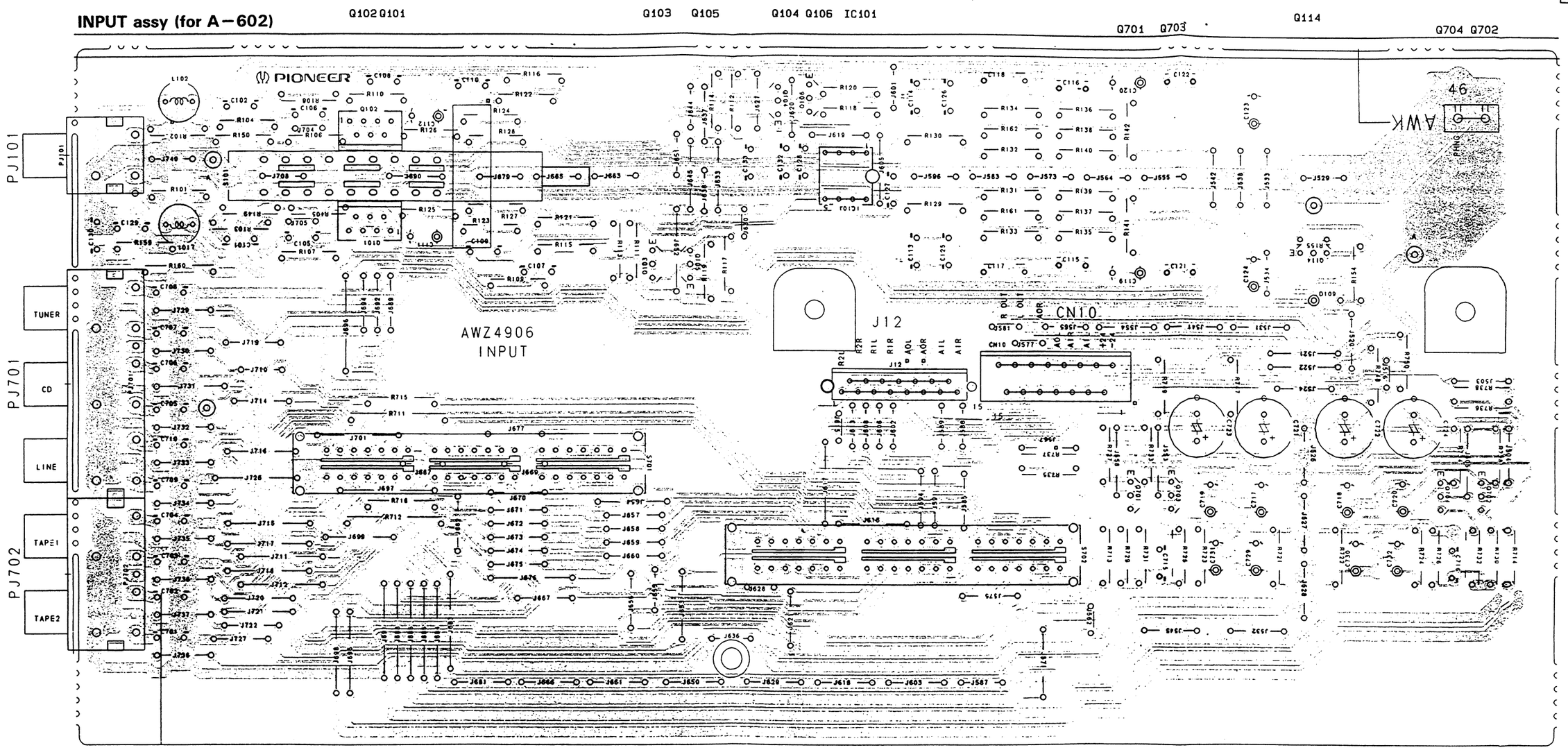

A-602R ONLY

To POWER TRANSFORMER T1 10

DIODE assy (AWZ4896)

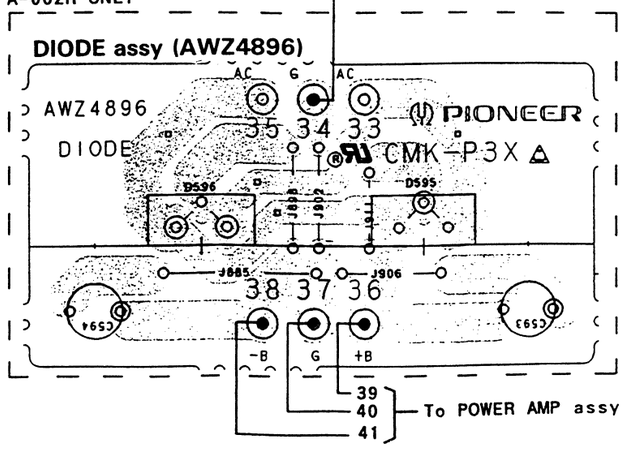

A-602 ONLY

To POWER TRANSFORMER T1 10

DIODE assy (AWZ4926)

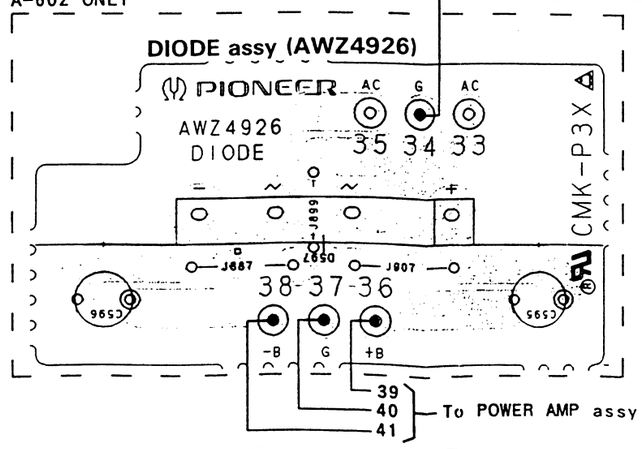

7.2.2 TONE Assy, VOLUME Assy and POWER SW Assy

This PCB connection diagram is viewed from the parts mounted side.

VOLUME assy (for A−602)

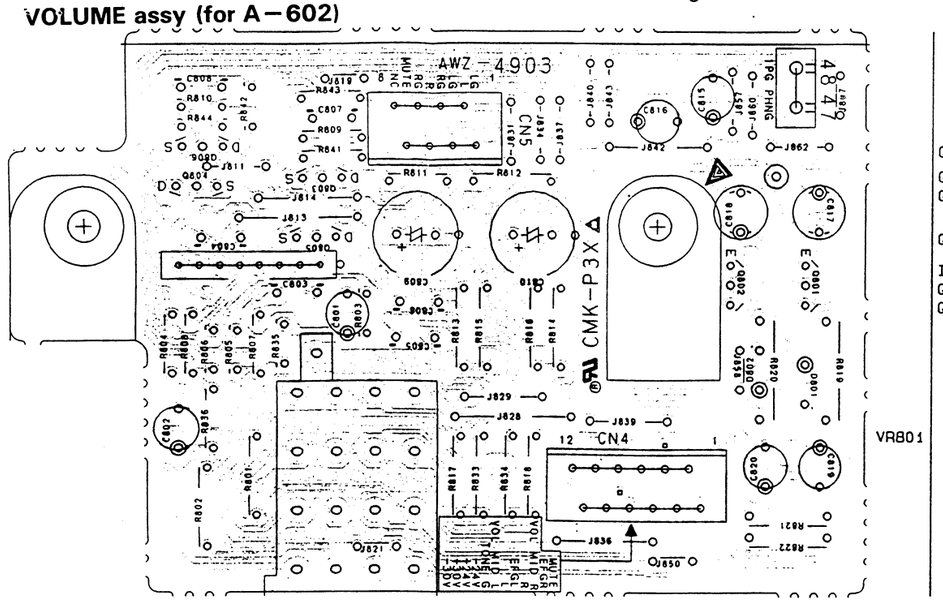

POWER SW assy (for A−602)

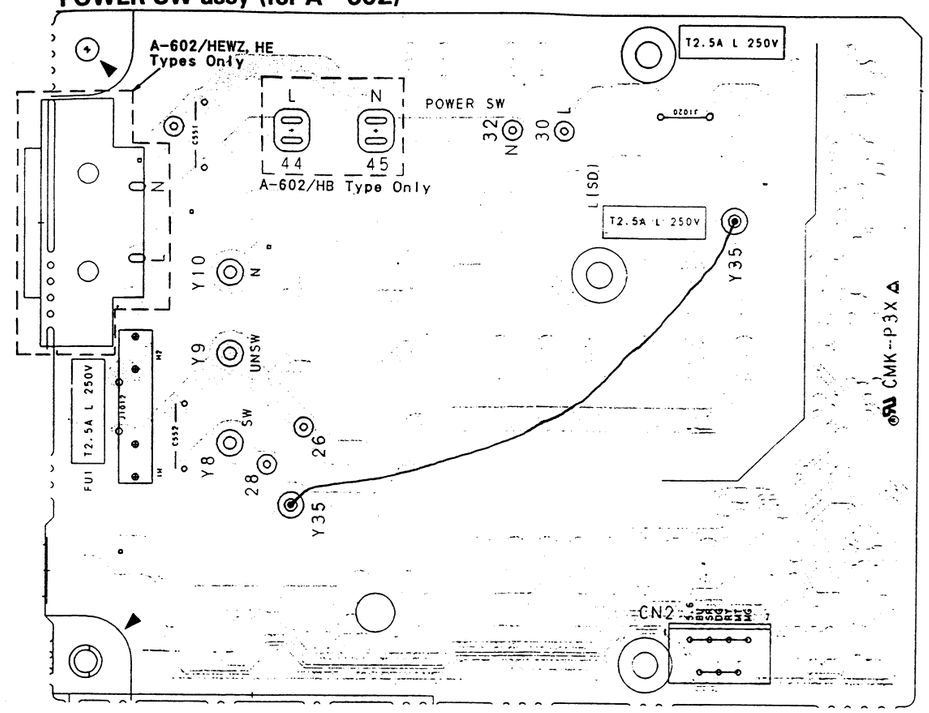

TONE assy (for A−602)

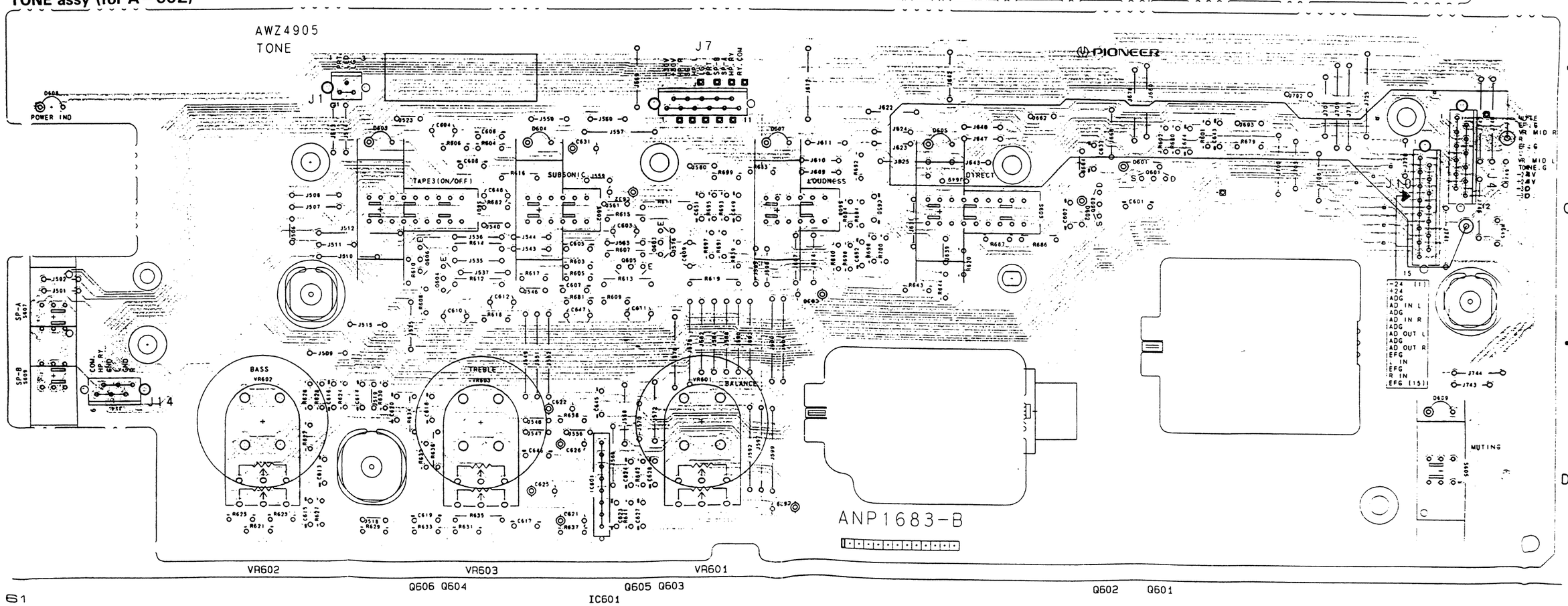

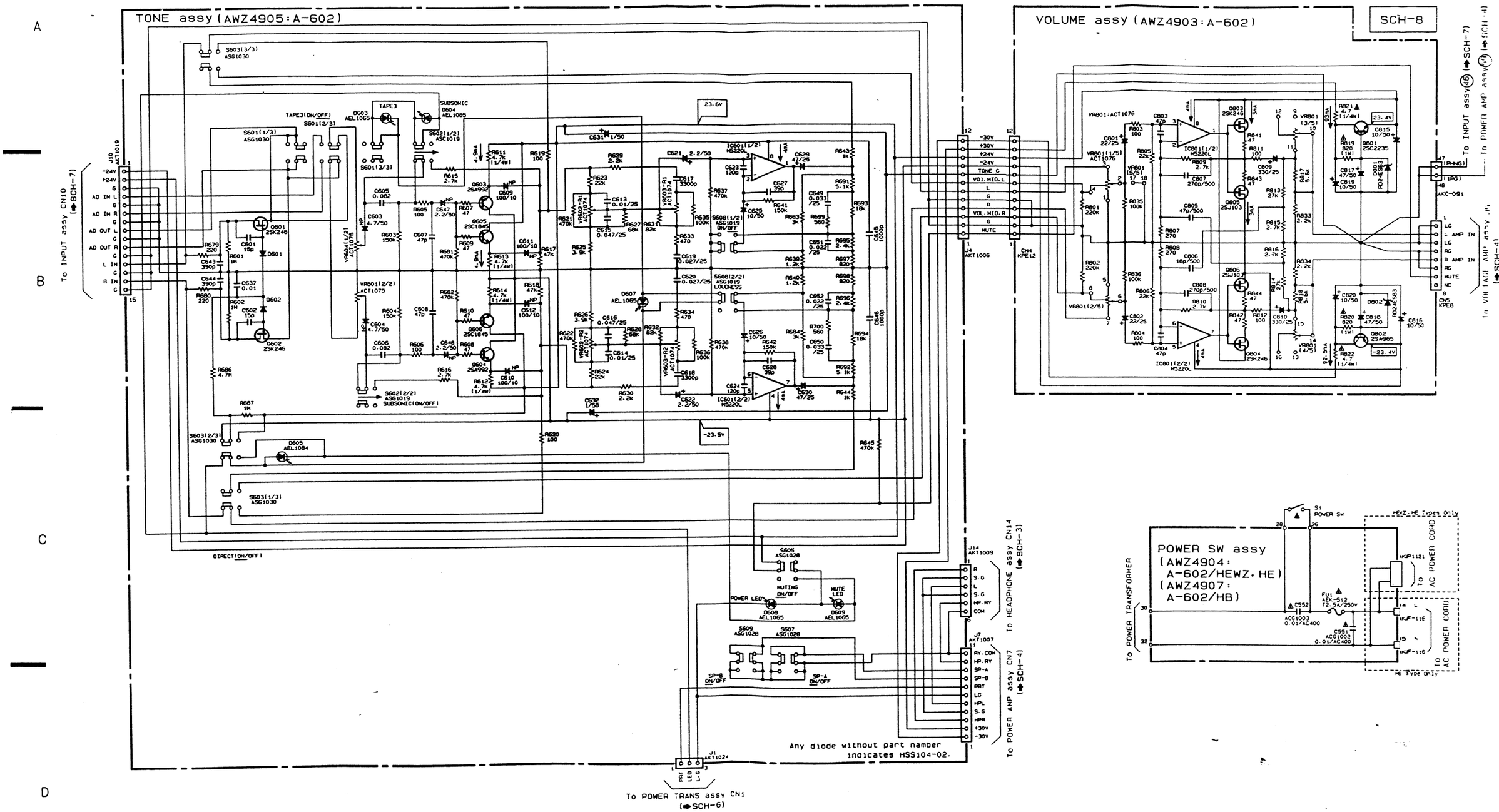

SCH-8 TONE ASSY, VOLUME ASSY, POWER SW ASSY

TONE ASSY, VOLUME ASSY, POWER SW ASSY **SCH-8**

8. PANEL FACILITIES

[FRONT PANEL]

The illustration shows model A-702R.

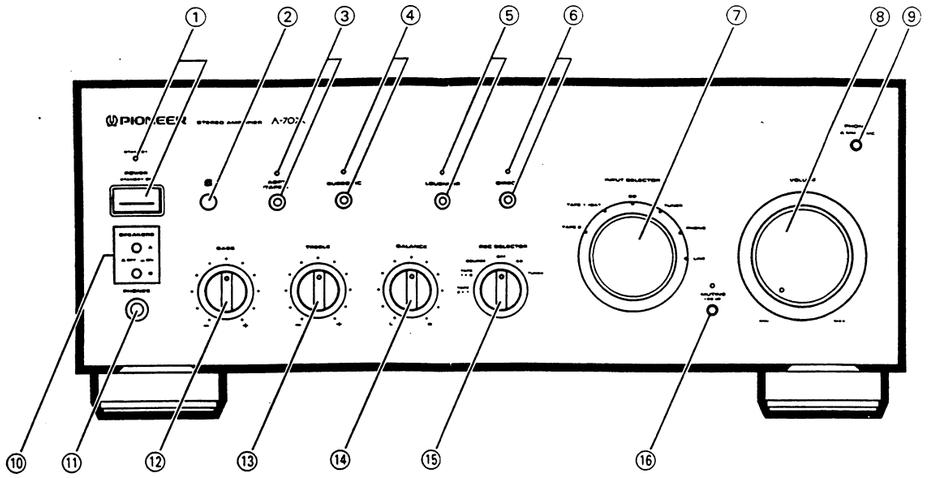

① POWER STANDBY/ON switch/indicator

This is the switch for electric power.

ON : When set to the ON position, power is supplied and the unit becomes operational.

STANDBY : When set to the STANDBY position, the main power flow is cut and the unit is no longer fully operational. A minute flow of power feeds the unit to maintain operation readiness.
When the STANDBY indicator lights, the unit is in STANDBY.

NOTE:
When performing timer recording with this unit, be sure to set the POWER STANDBY/ON switch to ON.

② Remote sensor window — Except A−602

③ ADPT (adaptor)/TAPE 3 button/indicator

Use this button to listen to tape playback, or to monitor a tape recording.

On: (Red illumination)
The indicator lights: Press when listening to the playback sound of the cassette deck or the adaptor connected to the ADPT/TAPE 3 IN/PLAY jacks, or to monitor the sound being recorded on the cassette deck connected to the ADPT/TAPE 3 OUT/REC jacks.

Off:
The indicator goes off: Normally leave the button in this position.

NOTE:
When the DIRECT button is set to on, this function does not operate and no signal is output at the ADPT/TAPE 3 OUT/REC jacks.
When the DIRECT button is in the off position, only the source signal is output from the ADPT/TAPE 3 OUT/REC jack.

④ SUBSONIC filter button/indicator

Use this button when playing records with coarse grooves.

On: (Red illumination)
The indicator lights: In this position, frequencies of 17 Hz and below are cut, eliminating super-low frequency noise caused by coarse record grooves and thus helping prevent sound distortion.

Off:
The indicator goes off: Leave in this position for normal playback.

NOTE:
This button does not operate when DIRECT button is in the on position. This button operates when PHONO is selected by the INPUT SELECTOR switch

⑤ LOUDNESS button/indicator

Use when listening at low volume levels.

On: (Red illumination)
The indicator lights: Boosts low and high frequencies to give added punch to playback at low volume.

Off:
The indicator goes off: Should normally be left in this position.

NOTES:
- *This button does not operate when the DIRECT button is in the on position.*
- *At volume levels below the 10 o'clock position, the LOUDNESS effect is obtained.*
- *At volume levels above the 10 o'clock position, the effect becomes increasingly weaker.*

⑥ DIRECT button/indicator

Use this button when you wish to bypass the various frequency adjusting circuits and adaptor jacks (ADPT/TAPE 3, SUBSONIC, BASS, TREBLE, BALANCE, LOUDNESS).

On: (Orange illumination)
When this button is in this position, the indicator lights and the signals input from the input jacks are reproduced without passing through the various frequency-adjusting circuits. This results in flat, pure sound which is a more faithful reproduction of the input source.

Off:
When the button is in this position the indicator goes out and the signal passes through the various frequency adjusting circuits.

NOTE:
The settings for ③ — ⑥ and ⑨ when the power was last turned off are memorized and recalled when power is turned on, regardless of whether the AC cord was plugged in or not.
When the DIRECT button is in the on position, the SUBSONIC filter is off.

⑦ INPUT SELECTOR switch

Use to select playback source. The selected source's indicator lights. Even if you switch the power off, the last selected source is memorized.

LINE:
Set to this position when listening to the programs from a component connected to the LINE jacks.

PHONO:
When selected, the indicator flashes for 8 seconds.
Set to this position when listening to record playback on a turntable.

TUNER:
Set to this position when listening to AM or FM broadcasts with a tuner.

CD:
Set to this position when listening to a compact disc playback with a CD player.

TAPE 1/DAT:
For playback with a cassette deck or digital audio tape deck connected to the TAPE 1/DAT jacks.

TAPE 2:
For playback with a cassette deck connected to the TAPE 2 jacks.

⑧ VOLUME control

Use to adjust volume level.

NOTE:
This unit is equipped with a circuit that attenuates the effect of tone and loudness controls as volume is turned up.

⑨ PHONO selector button

Set in accordance with the type of cartridge used in your turntable.

MM (▬) Released position:
Set to this position when using a moving magnet cartridge, or a MC (moving coil) cartridge with high output of 1 mV or more.

MC (▬) Depressed position:
Set to this position when using a moving coil cartridge.

⑩ SPEAKERS selector buttons

Use these buttons to listen to the speaker systems connected to SPEAKERS terminals.

OFF (▬) Released position:
No sound is heard from the speaker systems. Set to this position when listening with headphones.

A (▬) Depressed position:
For reproduction of sound with the speaker system connected to the SPEAKERS A terminals.

B (▬) Depressed position:
For reproduction of sound with the speaker system connected to the SPEAKERS B terminals.

⑪ PHONES jack

When using headphones, insert the plug into this jack. (When you want to listen with headphones only, refer to ⑩.)

⑫ BASS tone control

Use to adjust the low-frequency tone at low volume level. The center position is the flat (normal) position. When turned to the right, low-frequency tones are emphasized; when turned to the left, low-frequency tones are de-emphasized.

NOTES:
- *This function does not operate when the DIRECT button is in the on position.*
- *At volume levels below the 10 o'clock position, the set tone control effect is obtained.*
- *At volume levels above the 10 o'clock position, the effect becomes increasingly weaker.*

⑬ TREBLE tone control

Use to adjust the high-frequency tone at low volume level. The center position is the flat (normal) position. When turned to the right, high-frequency tones are emphasized; when turned to the left, high-frequency tones are de-emphasized.

NOTES:
- *This function does not operate when the DIRECT button is in the on position.*
- *At volume levels below the 10 o'clock position, the set tone control effect is obtained.*
- *At volume levels above the 10 o'clock position; the effect becomes increasingly weaker.*

⑭ BALANCE control

Should normally be left in the center position. Adjust balance if the sound is louder from one of the speakers. If the right side is louder, turn toward the L (left) position and if the left side is louder, turn toward the R (right) position.

NOTE:
This function does not operate when the DIRECT button is in the on position.

⑮ REC SELECTOR switch

Switch to select recording signal. When set at other positions than SOURCE or OFF, signals can be recorded during playback of the equipment selected by INPUT SELECTOR switch.

TUNER:
To record from a TUNER.

CD:
To record from a CD player.

OFF:
In this position nothing from the REC jacks of TAPE 1/DAT and TAPE 2 will be output. Select it when not recording; output to cassette decks will be disconnected, improving sound quality.

SOURCE:
To record the equipment selected by INPUT SELECTOR switch.

TAPE:

1 ► 2:
To record (copy) from the cassette deck of TAPE 1/DAT jacks, over to the cassette deck of TAPE 2 jacks.

2 ► 1:
To record (copy) from the cassette deck of TAPE 2 jacks, over to the cassette deck of TAPE 1/DAT jacks.

NOTE:
The REC SELECTOR switch has no effect on the recording output of the ADPT/TAPE 3 jacks.

⑯ MUTING button/indicator

Use to temporarily cut sound volume.

On: (Red illumination)
The indicator lights. The sound volume will be reduced—20 dB.

Off:
The indicator goes off. The sound will return to its previous volume.

[REAR PANEL]

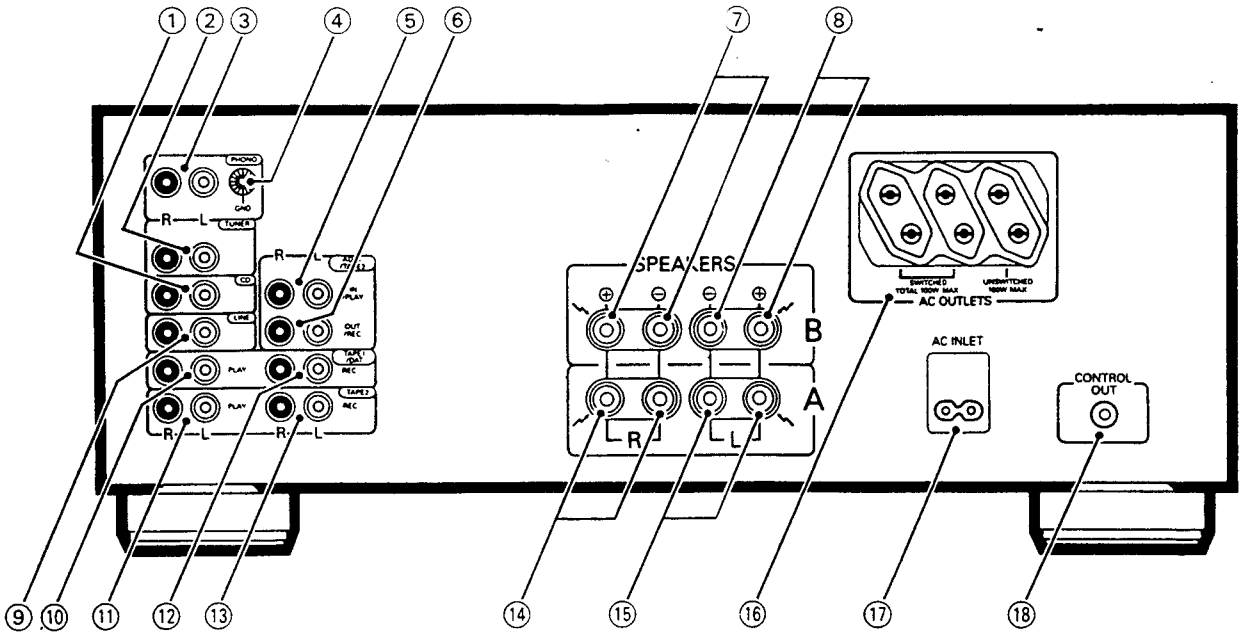

① **CD jacks**

② **TUNER jacks**

③ **PHONO jacks**

④ **Turntable ground terminal (GND)**

⑤ **ADPT/TAPE 3 IN/PLAY jacks**

⑥ **ADPT/TAPE 3 OUT/REC jacks**

⑦ **SPEAKERS B terminals (right channel)**

⑧ **SPEAKERS B terminals (left channel)**

⑦ **SPEAKERS B terminals (right channel)**

⑧ **SPEAKERS B terminals (left channel)**

⑨ **LINE jacks**

⑩ **TAPE 1/DAT PLAY jacks**

⑪ **TAPE 2 PLAY jacks**

⑫ **TAPE 1/DAT REC jacks**

⑬ **TAPE 2 REC jacks**

⑭ **SPEAKERS A terminals (right channel)**

⑮ **SPEAKERS A terminals (left channel)**

⑯ **AC OUTLETS**

⑰ **AC INLET jack**

Connect power cord to here and an AC wall socket, or the AC outl of an audio timer.
If you are going to be away from home for a long period of tim disconnect the unit from the wall socket.

⑱ **CONTROL OUT jack**

9. SPECIFICATIONS

[A-702R]

Continuous power output (both channels driven at 20 Hz to 20 kHz)**
T.H.D. 0.03 %, 4 Ω ..... 130 W + 130 W*
T.H.D. 0.015 %, 8 Ω ..... 85 W + 85 W*
DIN Continuous power output (both channels driven at 1 kHz)
T.H.D. 1.0 %, 4 Ω ..... 140 W + 140 W
T.H.D. 1.0 %, 8 Ω ..... 90 W + 90 W
Power bandwidth
0.05 %, 8 Ω ..... 5 Hz — 80 kHz*
Damping factor
(1 kHz/20 Hz to 20 kHz), 8 Ω 160/140
Dynamic power output (on EIA dynamic test signal)
4 Ω/2 Ω ..... 200 W/300 W
Total harmonic distortion**
20 Hz to 20 kHz
(continuous power output/−3 dB), 8 Ω ..... 0.007 %*
Inter-modulation distortion (at rated output) ..... 0.015 %*
• *Above specifications are for when power supply is 230 V.*

[A-602R] [A-602]

Continuous power output (both channels driven at 20 Hz to 20 kHz)**
T.H.D. 0.03 %, 4 Ω ..... 100 W + 100 W*
T.H.D. 0.015 %, 8 Ω ..... 70 W + 70 W*
DIN Continuous power output (both channels driven at 1 kHz)
T.H.D. 1.0 %, 4 Ω ..... 120 W + 120 W
T.H.D. 1.0 %, 8 Ω ..... 80 W + 80 W
Power bandwidth
0.05 %, 8 Ω ..... 5 Hz — 80 kHz*
Damping factor
(1 kHz/20 Hz to 20 kHz), 8 Ω 160/140
Dynamic power output (on EIA dynamic test signal)
4 Ω/2 Ω ..... 150 W/200 W
Total harmonic distortion**
20 Hz to 20 kHz
(continuous power output/−3 dB), 8 Ω ..... 0.009 %* (A-602R)
Total harmonic distortion**
20 Hz to 20 kHz, (continuous power output/−3 dB), 8 Ω
..... 0.007 %* (A-602)
Inter-modulation distortion (at rated output) ..... 0.015 %*
• *Above specifications are for when power supply is 230 V.*

Input sensitivity/impedance
PHONO (MM) ..... 2.8 mV/50 kΩ
PHONO (MC) ..... 0.24 mV/100 Ω
CD, TUNER, LINE, TAPE ..... 200 mV/50 kΩ
PHONO overload level
1 kHz, T.H.D. 0.1 % (MM/MC) ..... 200 mV/19 mV
Output level/impedance
TAPE REC, ADAPTOR OUTPUT ..... 200 mV/1 kΩ
Frequency response
PHONO (MM) ..... 20 Hz to 20 kHz ±0.2 dB
PHONO (MC) ..... 20 Hz to 20 kHz ±0.3 dB
CD, TUNER, LINE, TAPE ..... 1 Hz to 150 kHz $^{+0}_{-3}$ dB*
Tone control (volume control set at −30 dB position)
BASS ..... ±8 dB (100 Hz)
TREBLE ..... ±8 dB (10 kHz)
Loudness contour (volume control set at −30 dB position)
..... +5 dB (100 Hz)/+3 dB (10 kHz)
Filter (SUBSONIC) ..... 17 Hz (12 dB/oct.)
Muting ..... −20 dB
Signal-to-Noise ratio (IHF short circuit, A network)
PHONO (MM, 5 mV input/MC, 0.5 mV input) ..... 90 dB/76 dB*
CD, TUNER, LINE, TAPE ..... 110 dB*
Signal-to-Noise ratio (DIN, continuous power/50 mW)
PHONO (MM) ..... 74 dB/72 dB*
CD, TUNER, LINE, TAPE ..... 95 dB/81 dB*

Power Supply/Miscellaneous

Power Requirements ..... AC 220 — 230 V, 50/60 Hz

Power Consumption
A-702R ..... 720 W
A-602R ..... 650 W
A-602 ..... 650 W
AC outlets
Switched (x 2) ..... 100 W
Unswitched (x 1) ..... 100 W
Dimensions ..... 420 (W) x 432 (D) x 161 (H) mm
Weight (without package)
A-702R ..... 14.0 kg
A-602R ..... 12.4 kg
A-602 ..... 12.0 kg

Accessories (A-702R and A-602R)

Operating instructions 1
Remote control unit 1
Batteries (IEC R03, AAA) 2
Power cord 1

Accessories (A-602)

Operating instructions 1

NOTE:
Specifications and design are subject to possible modification without notice, due to improvements.

* When the DIRECT button is set to ON.
** Measured by Audio Spectrum Analyzer.

4.5 MPU ASSY

PCB-4

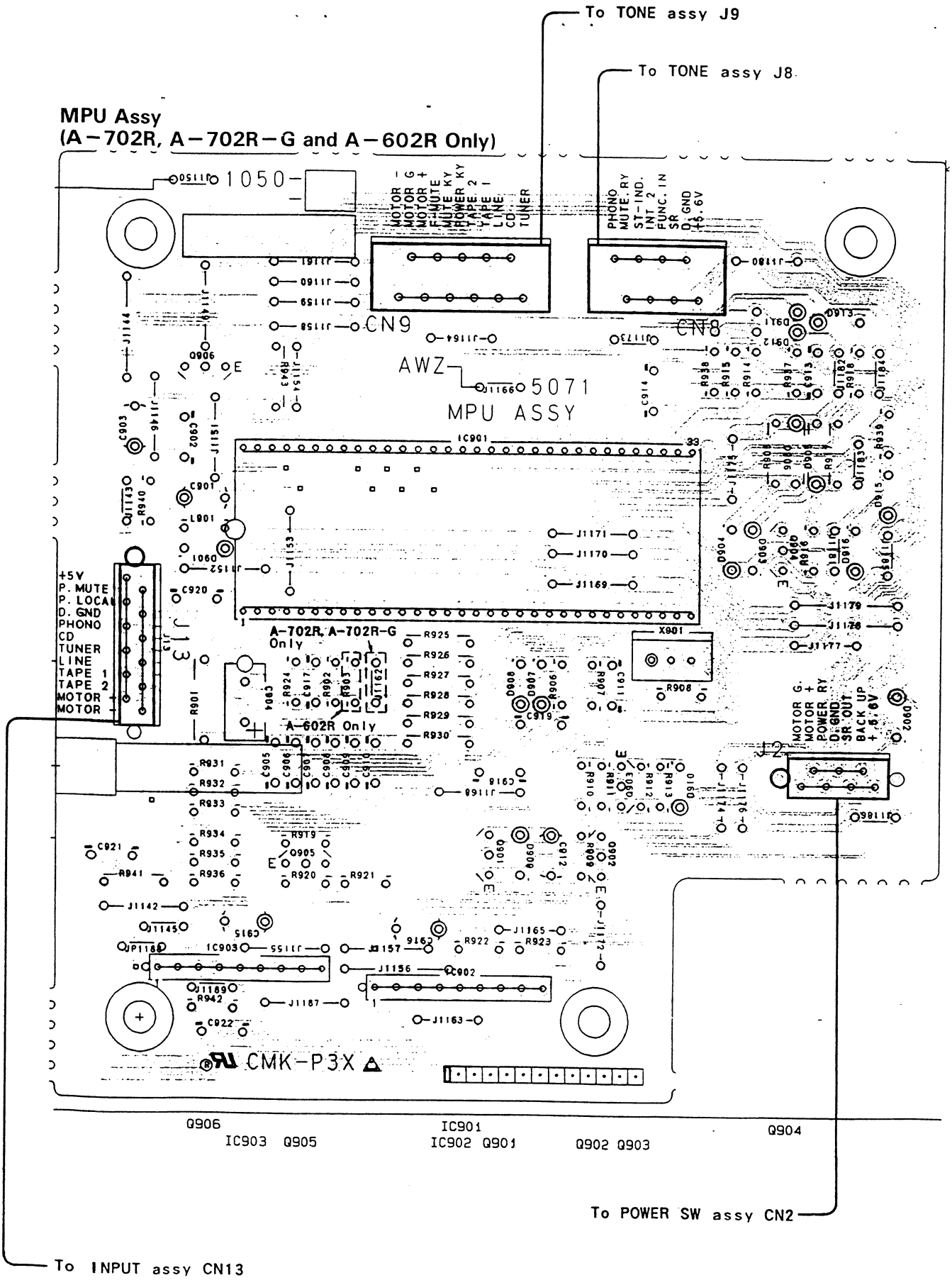

This PCB connection diagram is viewed from the parts mounted side.

PCB-5

To POWER TRANSFORMER T1 (3, 4)

AWZ 4890

POWER SW

T2.5A L 250V FU2 — SD Type Only

Except SD Type

A-702R/SD, A-602R Only

FU4 T1A L 250V — A-702R/HEWZ, HE, A-702R-G Only

FU3 T2.5A L 250V

SD Type Only

Except SD Type

SD Type Only

SD Type Only

Except SD Type

SD Type Only

FU1 T2.5A L 250V

SD Type Only

Except SD Type

CMK-P3X

POWER SW assy

To AC SOCKET

To MPU assy J2

This PCB connection diagram is viewed from the parts mounted side.

A-702R, A-702R-G ONLY

DIODE assy

PIONEER AWZ4886 DIODE

CMK-P3X

To POWER TRANSFORMER T1 (11, 9)

To POWER AMP assy J19

POWER TRANS assy

CMK-P3X

AWZ4887 POWER TRANS

To POWER TRANSFORMER T1 (9, 10, 11)

To TONE assy J1

5. PCB PARTS LIST

NOTES :

- *Parts marked by "NSP" are generally unavailable because they are not in our Master Spare Parts List.*
- *The ⚠ mark found on some component parts indicates the importance of the safety factor of the part. Therefore, when replacing, be sure to use parts of identical designation.*
- *Parts marked by "◉" are not always kept in stock. Their delivery time may be longer than usual or they may be unavailable.*
- *When ordering resistors, first convert resistance values into code form as shown in the following examples.*

Ex. 1 When there are 2 effective digits (any digit apart from 0), such as 560 ohm and 47k ohm (tolerance is shown by J = 5%, and K = 10%).

560Ω → 56 × 10¹ → 561 ..... RD1/8PM 5 6 1 J
47kΩ → 47 × 10³ → 473 ..... RD1/4PS 4 7 3 J
0.5Ω → 0R5 ..... RN2H 0 R 5 K
1Ω → 010 ..... RS1P 0 1 0 K

Ex. 2 When there are 3 effective digits (such as in high precision metal film resistors).

5.62kΩ → 562 × 10¹ → 5621 ..... RM1/4PC 5 6 2 1 F

Mark	No.	Description	Parts No.
LIST OF ASSEMBLIES			
NSP		AF ASSY	AWK1684
		├ POWER AMP ASSY	AWZ4882
		├ VOLTAGE AMP ASSY	AWZ4883
		├ REC OUT ASSY	AWZ4884
		├ DIODE ASSY	AWZ4886
		├ POWER TRANS ASSY	AWZ4887
		└ POWER SW ASSY	AWZ4890
NSP		INPUT ASSY	AWK1685
		├ HEADPHONE ASSY	AWZ4885
		├ TONE ASSY	AWZ4891
		└ INPUT ASSY	AWZ4892
NSP		COMPLEX CONTROL ASSY	AWP1050
		├ MPU ASSY	AWZ5071
		└ VOLUME ASSY	AWZ5072
POWER AMP ASSY			
SEMICONDUCTORS			
		Q307	2SA1115
		Q403, Q404	2SA1306
		Q502	2SA992
		Q504	2SB1274
		Q301, Q302, Q501, Q506	2SC1845
		Q309	2SC2235
		Q303–Q306, Q308	2SC2458
		Q401, Q402	2SC3298
		Q503, Q505	2SD1913
		D301–D304, D504–D506	HSS104–02
		D305	RD15ESB2
		D503	RD27ESB2
		D501, D502	RD30ESB2
RELAIES			
		RY403	ASR1005
		RY401, RY402	ASR1026
COILS			
		L401, L402	ATH1011
CAPACITORS			
		C417–C420	CCCSL680K50C
		C308–C310	CEAS010M50
		C306	CEAS220M50
		C501, C502	CEAS331M50
		C303, C304	CEAS471M6
		C301, C302	CEAS4R7M50
		C505	CEHAQ100M50
		C503, C504, C506	CEHAQ101M50
		C401–C404	CFTXA104J50
		C405–C412	CFTXA223J50
		C305	CKCYF103Z50
RESISTORS			
	⚠	R409–R412 (0.22, 5W)	ACN1075
		R513–R515	RD1/2PM102J
		R421–R424	RD1/4PM100J
		R305, R306, R310	RD1/4PM103J
		R303, R304	RD1/4PM153J
		R507–R509	RD1/4PM331J
		R311	RD1/4PM334J
		R312	RD1/4PM680J
		R505, R506, R511	RD1/4PM821J
	⚠	R413–R416	RD1/4PMFL39[illegible]
	⚠	R433–R436, R441, R442	RFA1/4PS101J
	⚠	R309	RFA1/4PS221J
	⚠	R437–R440	RFA1/4PS470J
	⚠	R401–R408, R443, R444, R503, R504, R512, R519, R520	RFA1/4PS4R7J
	⚠	R417, R418	RS1LMF101J
	⚠	R431, R432	RS1LMF681J
	⚠	R419, R420	RS2LMF100J
	⚠	R429, R430	RS2LMF331J

Mark	No.	Description	Parts No.
⚠	R510		RS2LMF392J
⚠	R501, R502		RS2LMF472J
	Other Resistors		RD1/8PM□□□J
OTHERS			
		8P SPEAKER TERMINAL	AKE1011
	CN7	11P JUMPER CONNECTOR	KPE11
		SCREW	ABA−298

VOLTAGE AMP ASSY

SEMICONDUCTORS

	Q213, Q214, Q221, Q222	2SA1048
	Q207, Q208, Q217, Q218, Q237, Q238, Q249, Q250	2SA1145
	Q209, Q210	2SA1240
	Q215, Q216, Q223, Q224	2SC2458
	Q233, Q234	2SC2603
	Q205, Q206, Q219, Q220, Q235, Q236, Q251, Q252	2SC2705
	Q245−Q248	2SC2878
	Q211, Q212	2SC3067
	Q203, Q204	2SJ44
	Q201, Q202	2SK163
	D201−D204	AEL1148
	D209−D212	HSS104−02
	D213−D216	RD10ESB
	D205−D208	RD8.2ESB3

CAPACITORS

	C209−C212	CCCSL070D500
	C201, C202	CCCSL101K500
	C213, C214	CEAS100M50
	C231, C232, C235, C236	CEAS331M63
	C203−C206	CEXA221M25
	C237−C240	CKCYB331K50
	C215, C216	CKCYB471K50
	C245, C246	CKCYF103Z50
	C229, C230, C233, C234	CKCYF223Z50

RESISTORS

	VR201, VR202 (100)	ACP1037
	VR203, VR204 (47k)	ACP1045
	R285, R286, R291, R292	RD1/2PM222J
	R217−R220, R227−R234, R273, R274	RD1/4PM101J
	R203, R204	RD1/4PM104J
	R245, R246	RD1/4PM122J
	R243, R244	RD1/4PM222J
	R235−R238	RD1/4PM225J
	R225, R226	RD1/4PM274J
	R279, R280	RD1/4PM470J
	R221−R224	RD1/4PM473J
	R239−R242	RD1/4PM512J
⚠	R251, R252	RD1/4PMF561J
	R267−R270	RDR1/2PM472J
	R205−R208	RDR1/4PM100J
	R275, R276	RDR1/4PM101J
	R271, R272	RDR1/4PM221J
	R293, R294	RDR1/4PM222J
⚠	R213−R216, R247−R250	RFA1/4PS101J
⚠	R253−R256	RFA1/4PS271J
⚠	R281−R284	RFA1/4PS4R7J
	Other Resistors	RD1/8PM□□□J

OTHERS

CN18	12P JUMPER CONNECTOR	KPE12
CN22	3P JUMPER CONNECTOR	KPE3

REC OUT ASSY

CAPACITORS

	C771−C778	CCCSL221J50

RESISTORS

	All Resistors	RD1/8PM□□□J

OTHERS

	8P PIN JACK (TAPE1, 2 ADPT)	AKB1144
CN12	15P JUMPER CONNECTOR	KPE15

DIODE ASSY

SEMICONDUCTORS

	D591−D594	F10KF20

CAPACITORS

	C591, C592	CEAS010M100

POWER TRANS ASSY

SEMICONDUCTORS

	D527	HSS104−02
	D525, D526, D528	S5566

CAPACITORS

	C528, C529 (0.01/150V)	ACG1005
	C525, C526 (1/100V)	ACH1237
	C524	CEAS101M63
	C523	CEEA221M63
	C527	CEAS2R2M50

RESISTORS

	R526, R530	RD1/4PM100J
	R522	RD1/4PM222J
	R528	RD1/4PM682J
⚠	R523−R525, R529	RS1LMF103J

Mark	No.	Description	Parts No.
OTHERS			
	CN1	3P JUMPER CONNECTOR	KPE3

POWER SW ASSY

Mark	No.	Description	Parts No.
SEMICONDUCTORS			
	IC551		NJM78M56FAS
	Q551		2SD1913
	Q552		XDC143ES
	D557		HSS104−02
	D556, D558		RD6.2ESB3
	D554		RD6.8ESB
	D551−D553		S5566
RELAY			
⚠	RY551		ASR1036
COILS & TRANSFORMER			
⚠	L551, L552		ATX1012
⚠	T551		ATT1229
CAPACITORS			
⚠	C551, C562	(0.01/400V)	ACG1002
⚠	C552, C561	(0.01/400V)	ACG1003
	C580	(0.01/150V)	ACG1005
	C557, C559		CEAS100M50
	C556		CEAS101M25
	C554		CEAS102M25
	C555, C558		CEAS470M25
	C553, C560		CQMXA224J100
	C564		CKCYF103Z50
RESISTORS			
	R556		RD1/4PM102J
	R553		RD1/4PM222J
	R557		RD1/4PM331J
	R551		RD1/4PM470J
⚠	R555		RFA1/4PS4R7J
⚠	R552		RS2LMF101J
	R560		RD1/4PM010J
	Other Resistors		RD1/8PM□□□J
OTHERS			
		MINI JACK	AKN−207
⚠		1P AC INLET	AKP1121
	CN2	7P JUMPER CONNECTOR	KPE7

HEADPHONE ASSY

Mark	No.	Description	Parts No.
CAPACITORS			
	C491, C492		CKCYB392K50
OTHERS			
	CN8103	HEADPHONE JACK	AKN1025
	CN14	6P JUMPER CONNECTOR	KPE6

TONE ASSY

Mark	No.	Description	Parts No.
SEMICONDUCTORS			
	IC601		M5220L
	Q603, Q604		2SA992
	Q605, Q606		2SC1845
	Q609, Q610, Q620, Q623, Q624		2SC2458
	Q601, Q602		2SK246
	Q622, Q625, Q626		XDA124ES
	Q612−Q619		XDC143ES
	D603, D604, D607−D609		AEL1065
	D605		AEL1084
	D610−D615		AEL1099
	D601, D602, D606, D616−D620		HSS104−02
SWITCHES			
	S606		ASD1026
	S602, S608		ASG1019
	S604		ASG1029
	S601, S603		ASG1030
	S605		ASG1054
	S607, S609		ASG1028
CAPACITORS			
	C623, C624		CCCSL121J50
	C601, C602		CCCSL150J50
	C627, C628		CCCSL390J50
	C607, C608		CCCSL470J50
	C609−C612		CEANP101M10
	C647, C648		CEANP2R2M50
	C603, C604		CEANP4R7M50
	C631, C632		CEAS010M50
	C625, C626, C639		CEAS100M50
	C621, C622		CEAS2R2M50
	C629, C630		CEAS470M25
	C641		CEASR22M50
	C605, C606		CFTXA823J50
	C645, C646		CKCYB102K50
	C617, C618		CKCYB332K50
	C643, C644		CKCYB391K50
	C637, C638		CKCYF103Z50
	C613, C614		CKCYX103M25
	C651, C652		CKCYX223M25
	C619, C620		CKCYX273M25
	C649, C650		CKCYX333M25
	C615, C616		CKCYX473M25
RESISTORS			
	VR602, VR603	(100k−20A×2)	ACT1074
	VR601	(100k−B×2)	ACT1075
	R660		RD1/4PM131J
	R658		RD1/4PM151J
	R659		RD1/4PM271J
	R611−R614		RD1/4PM472J
	Other Resistors		RD1/8PM□□□

Mark	No.	Description	Parts No.
OTHERS			
		REMOTE RECEIVER UNIT	AXX1023

INPUT ASSY

Mark	No.	Description	Parts No.
SEMICONDUCTORS			
	IC101		M5220P
	Q113		2SA965
	Q701, Q702		2SA992
	Q103–Q106, Q703, Q704		2SC1845
	Q114		2SC2235
	Q121		2SC2458
	Q107–Q110		2SC3327
	Q101, Q102		2SK389
	Q117, Q119		XDA143ES
	Q116, Q120, Q122		XDC124ES
	Q115, Q118		XDC143ES
	D103, D106, D108		HSS104–02
	D109		RD18ESB3
SWITCHES			
	S701		ASD1017
	S101		ASG1053
	S702		ASU1016
COILS			
	L101, L102		ATH1010
CAPACITORS			
	C105, C106		CCCSL151J50
	C129, C701–C710		CCCSL221J50
	C109, C110		CCCSL271J50
	C715, C716		CCCSL470K500
	C111, C112		CEAS221M25
	C119, C120		CEAS3R3M50
	C123, C124		CEAS470M25
	C729–C732		CEEA100M50
	C721–C724		CEEA331M25
	C717–C720		CEEA470M25
	C101, C102		CFTXA103J50
	C113, C114		CFTXA123J50
	C115, C116		CFTXA183J50
	C117, C118		CFTXA333J50
	C107, C108		CKCYB472K50
	C134, C135		CKCYB102K50
	C127, C128, C130, C132, C133, C727, C733, C734		CKCYF103Z50
	C125, C126		CQMA272J50
	C121, C122		CQMA472J50
RESISTORS			
	R135, R136, R149, R150, R160		RD1/4PM100J
	R103, R104, R143, R144, R723, R724, R737, R738		RD1/4PM101J
	R721, R722, R725, R726		RD1/4PM104J
	R109, R110		RD1/4PM151J
	R119, R120		RD1/4PM153J
	R115, R116		RD1/4PM182J
	R747–R750		RD1/4PM220J
	R711–R716		RD1/4PM221J
	R121, R122		RD1/4PM225J
	R154		RD1/4PM272J
	R141, R142		RD1/4PM331J
	R111–R114		RD1/4PM332J
	R729–R732		RD1/4PM470J
	R105, R106		RD1/4PM471J
	R727, R728, R733, R734		RD1/4PM472J
	R107, R108, R139, R140, R735, R736		RD1/4PM473J
	R117, R118		RD1/4PM680J
	R161, R162		RDR1/4PM102F
	R123, R124		RDR1/4PM121F
	R137, R138		RDR1/4PM391F
	R129, R130		RDR1/4PM512F
	R133, R134		RDR1/4PM560F
	R131, R132		RDR1/4PM623F
	R127, R128		RDR1/4PM8R2F
	R125, R126		RDR1/4PM910F
	R157		RD1/2PM103J
	Other Resistors		RD1/8PM□□□J
OTHERS			
	PJ702	4P PIN JACK (TAPE1, 2 PLAY)	AKB1124
	PJ701	6P PIN JACK (CD, TUNER, LINE)	AKB1135
	PJ101	2P PIN JACK (PHONO)	AKB1211
	CN13	12P JUMPER CONNECTOR	KPE12
	CN10	15P JUMPER CONNECTOR	KPE15

MPU ASSY

Mark	No.	Description	Parts No.
SEMICONDUCTORS			
	IC901		PD5224A
	IC902, IC903		TA8409S
	Q902		2SA1048
	Q903		2SC2458
	Q906		XDA124ES
	Q901, Q904, Q905		XDC124ES
	D901–D909, D911–D913, D915, D916		HSS104–02
	D910		RD6.2ESB
COIL			
	L901		LAU220K

Mark	No.	Description	Parts No.
CAPACITORS			
	C904		ACH1135
	C919		CCMSL101J50
	C912		CEAS2R2M50
	C901, C903, C915, C916		CEAS470M25
	C902, C918, C920−C922		CKCYF103Z50
	C905−C911, C913, C914, C917		CKMYB271K50
RESISTORS			
	R901		RD1/4PM101J
	Other Resistors		RD1/8PM□□□J
OTHERS			
	X901	(4.19MHz)	ASS1018
	CN9	11P JUMPER CONNECTOR	KPE11
	CN8	8P JUMPER CONNECTOR	KPE8

VOLUME ASSY

Mark	No.	Description	Parts No.
SEMICONDUCTORS			
	IC801		M5220P
	Q802		2SA965
	Q801		2SC2235
	Q805, Q806		2SJ103
	Q803, Q804		2SK246
	D801, D802		RD24ESB3
CAPACITORS			
	C805, C806		CCCSL270K500
	C807, C808		CCCSL271K500
	C803, C804		CCCSL470K500
	C801, C802		CEAS220M25
	C815−C820		CEAS221M35
	C809, C810		CEEA101M25
	C813		CKCYF103Z50
RESISTORS			
	VR801	(20k×2 30k×2)	ACX1085
	R803, R804, R811, R812		RD1/4PM101J
	R835, R836		RD1/4PM104J
	R833, R834		RD1/4PM222J
	R805, R806		RD1/4PM223J
	R801, R802		RD1/4PM224J
	R807, R808		RD1/4PM271J
	R809, R810		RD1/4PM302J
	R813, R814		RD1/4PM303J
	R815, R816		RD1/4PM272J
	R841−R844		RD1/4PM470J
	R817, R818		RD1/4PM562J
⚠	R821, R822		RFA1/4PS4R7J
⚠	R819, R820		RS1LMF821J
OTHERS			
	CN4	13P JUMPER CONNECTOR	KPE13
	CN5	8P JUMPER CONNECTOR	KPE8
	CN21	3P JUMPER CONNECTOR	KPE3

6. ADJUSTMENTS

1) IDLE CURRENT ADJUSTMENT

1. Connect the measuring instrument as Fig. 6−1. (R409 or R410)
2. Set the VOLUME CONTROL to minimum.
3. Set the POWER switch to ON.
4. Adjust VR203 (VR204) so that the voltage between both sides of R409 (R410) becomes 16mV±3mV.

Note)
After turning on the power, wait at least 5 minutes before adjustment.

2) DC OFFSET ADJUSTMENT

1. Connect the measuring instrument as Fig. 6−1. (SP terminal)
2. Adjust VR201 (VR202) so that the voltage between speaker terminal becomes 80mV±20mV.

Note)
After turning on the power, wait at least 5 minutes before starting the adjustment and complete the adjustment within 10 minutes after turning on the power.

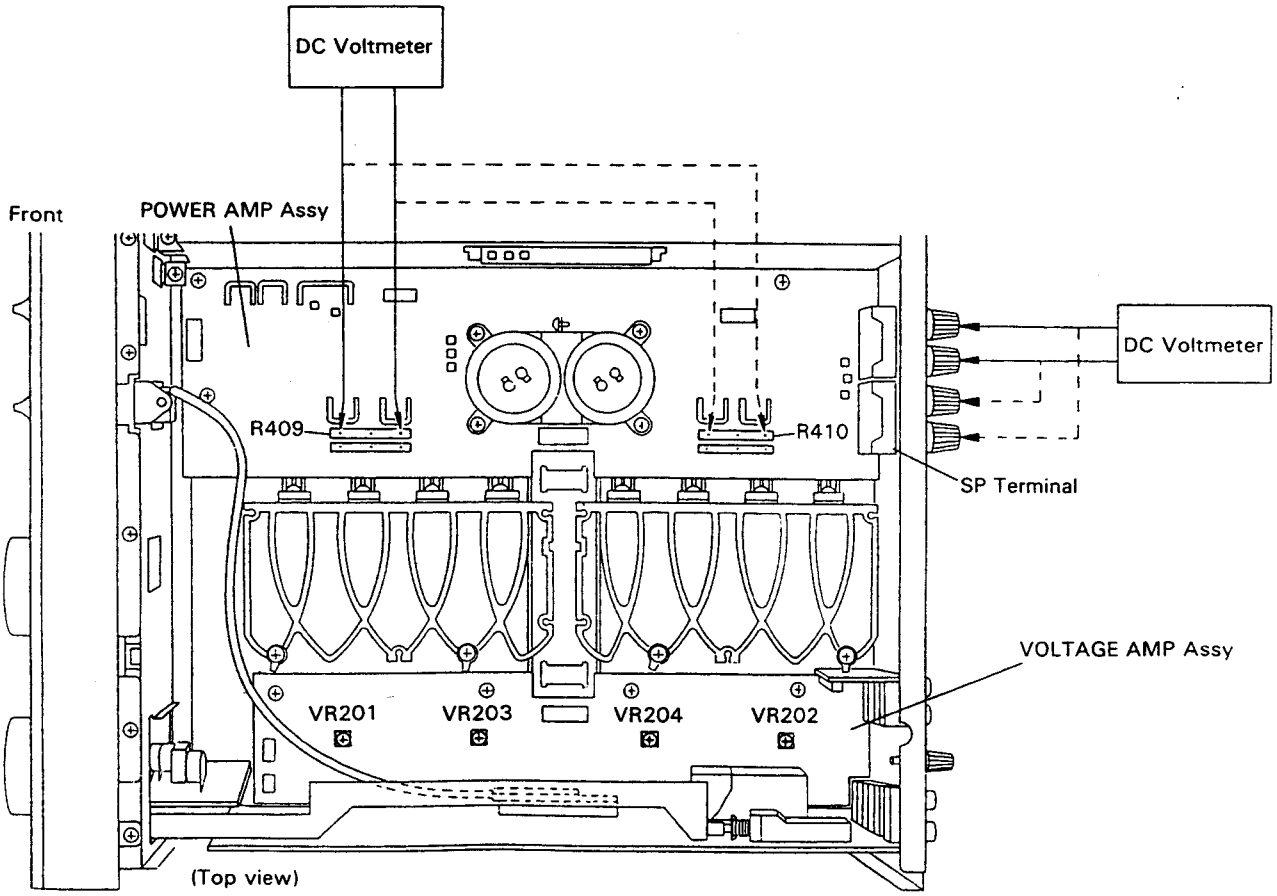

Fig. 6−1 Adjustment Method

TONE ASSY

AWZ4905 and AWZ4891 have the same construction except for the following :

Mark	Symbol & Description	Part No.		Remarks
		AWZ4891	AWZ4905	
	Q612–Q619	XDC143ES	.....	
	Q609, Q610, Q620, Q623, Q624	2SC2458	.....	
	Q622, Q625, Q626	XDA124ES	.....	
	D606, D616–D620	HSS104–02	.....	
	D610–D615	AEL1099	.....	
	S604	ASG1029	.....	
	S605	ASG1054	ASG1028	
	S606	ASD1026	.....	
	C638	CKCYF103Z50	.....	
	C639	CEAS100M50	.....	
	C641	CEASR22M50	.....	
	R647, R651–R653	RD1/8PM472J	.....	
	R648, R657	RD1/8PM102J	.....	
	R649, R674, R675, R677	RD1/8PM104J	.....	
	R650	RD1/8PM103J	.....	
	R658	RD1/4PM151J	.....	
	R659	RD1/4PM271J	.....	
	R660	RD1/4PM131J	.....	
	R662–R664, R666–R668, R670–R672	RD1/8PM821J	.....	
	R646, R661, R665, R669, R673	RD1/8PM222J	.....	
	R688	RD1/8PM474J	.....	
	Remote receiver unit	AXX1023	.....	

DIODE ASSY

AWZ4896, AWZ4926 and AWZ4886 have the same construction except for the following :

Mark	Symbol & Description	Part No.			Remarks
		AWZ4886	AWZ4896	AWZ4926	
	D591–D594	F10KF20	.....	.....	
	D595	.....	FMM–22S	.....	
	D596	.....	FMM–22R	.....	
	D597	.....	.....	D5SB20F	
	C591, C592	CEAS010M100	.....	.....	
	C593, C594	.....	CEAS010M100	.....	
	C595, C596	.....	.....	CEAS010M100	

INPUT ASSY

AWZ4901, AWZ4906 and AWZ4892 have the same construction except for the following :

Mark	Symbol & Description	Part No.			Remarks
		AWZ4892	AWZ4901	AWZ4906	
	Q107–Q110	2SC3327	.....	.....	
	Q113	2SA965	.....	.....	
	Q115, Q118	XDC143ES	.....	.....	
	Q116, Q120, Q122	XDC124ES	.....	.....	
	Q117, Q119	XDA143ES	.....	.....	
	Q121	2SC2458	.....	.....	
	D103, D106, D108	HSS104–02	.....	.....	
	S701	ASD1017	ASD1017	ASU1016	
	C134, C135	CKCYB102K50	.....	.....	
	C727, C733, C734	CKCYF103Z50	CKCYF103Z50	.....	
	R143, R144	RD1/4PM101J	.....	.....	
	R145, R146	RD1/8PM123J	.....	.....	
	R147, R148	RD1/8PM223J	.....	.....	
	R151	RD1/8PM822J	.....	.....	
	R152	RD1/8PM183J	.....	.....	
	R153, R158	RD1/8PM103J	.....	.....	
	R154	RD1/4PM272J	RD1/4PM562J	RD1/4PM562J	
	R157	RD1/2PM103J	.....	.....	
	R745	RD1/8PM103J	RD1/8PM103J	.....	
	PJ701 Pin jack (6P)	AKB1135	AKB1121	AKB1121	
	PJ101 Pin jack (2P)	AKB1211	AKB1100	AKB1100	
	CN13 Connector (12P)	KPE12	KPE12	.....	

VOLTAGE AMP ASSY

AWZ4895, AWZ5076 and AWZ4883 have the same construction except for the following :

Mark	Symbol & Description	Part No.			Remarks
		AWZ4883	AWZ4895	AWZ5076	
	Q247, Q248	2SC2878	2SC2878	.....	
	D205–D208	RD8.2ESB3	RD13ESB2	RD13ESB2	
	C203–C206	CEXA221M25	CEAS221M16	CEAS221M16	
	C231, C232, C235, C236	CEAS331M63	CEAS331M63	CEAS101M63	
	R205–R208	RDR1/4PM100J	RD1/4PM100J	RD1/4PM100J	
	R225, R226	RD1/4PM274J	RD1/4PM224J	RD1/4PM224J	
	R267–R270	RDR1/2PM472J	RD1/2PM472J	RD1/2PM472J	
	R271, R272	RDR1/4PM221J	RD1/4PM221J	RD1/4PM221J	
	R275, R276	RDR1/4PM101J	RD1/4PM101J	RD1/4PM101J	
	R289, R290	RD1/8PM562J	RD1/8PM562J	.....	
	R293, R294	RDR1/4PM222J	RD1/4PM222J	RD1/4PM222J	
	CN22	KPE3	.....	.....	