ONKYO® SERVICE MANUAL

COMPACT DISC PLAYER
MODEL DX-710

Black and Silver models

BHMD,BHMDN,BHMDC	120V AC, 60Hz
BHMP,BHMPF,MP,MPF	230V AC, 50Hz
BHMW	120/220V AC, 50/60Hz
BHMQA	240V AC,50Hz

SAFETY-RELATED COMPONENT WARNING!!

COMPONENTS IDENTIFIED BY MARK ⚠ ON THE SCHEMATIC DIAGRAM AND IN THE PARTS LIST ARE CRITICAL FOR RISK OF FIRE AND ELECTRIC SHOCK. REPLACE THESE COMPONENTS WITH ONKYO PARTS WHOSE PART NUMBERS APPEAR AS SHOWN IN THIS MANUAL.

MAKE LEAKAGE-CURRENT OR RESISTANCE MEASUREMENTS TO DETERMINE THAT EXPOSED PARTS ARE ACCEPTABLY INSULATED FROM THE SUPPLY CIRCUIT BEFORE RETURNING THE APPLIANCE TO THE CUSTOMER.

SPECIFICATIONS

Signal readout system:	Optical non-contact
Reading rotation:	About 500~200 r.p.m. (constant linear velocity)
Linear velocity:	1.2~1.4m/s
Error correction system:	Cross interleave reedsolomon code
D/A converter:	1 bit PWM/Accu Pulse D/A converter
Sampling frequency:	352.8kHz (8 times oversampling)
Number of channels:	2 (Stereo)
Frequency response:	5Hz~20kHz
Total harmonic distortion:	0.004% (at 1kHz)
Dynamic range:	96dB
Signal to noise ratio:	100dB
Channel separation:	90dB (at 1kHz)
Wow and Flutter:	Below threshold of measurability
Power consumption:	12 watts
Output level:	2 volts r.m.s.
Dimensions (W×H×D):	455×110×305mm 18"×4-3/8"×12"
Weight:	4.9kg. 10.8lbs.

Specifications are subject to change without notice.

ONKYO®
AUDIO COMPONENTS

www.hifiengine.com

TABLE OF CONTENTS

Specifications ····· 1
Service procedures ····· 2
Note on compact disc ····· 2
Caution of replacement of optical pickup ····· 3
Protection of eyes from laser beam during servicing ··· 4
Laser warning label ····· 4
Mechanism exploded view ····· 5
Exploded view ····· 8
Parts list ····· 9
IC block diagrams and descriptions ····· 10
Adjustment procedures ····· 18
Printed circuit board view ····· 21
Pc board-parts list ····· 22
Schematic diagram ····· 23
Troubleshooting guide ····· 27
Block diagram ····· 29
Packing view ····· 30

NOTE ON COMPACT DISC

- **Holding Compact Discs**

Hold Compact Discs by the edges so that you do not touch the surface of disc. Remember that the side of the disc with the "rainbow" reflection is the side containing the audio information.

Do not attach tape or paper to the label side of the disc and always be careful not to leave fingerprints on the side that is played.

- **Storing Compact Discs**

Store Compact Discs in a location protected from direct sunlight, high heat and humidity and extremely high and low temperatures. Discs should never be left in the trunk or interior of an automobile in the sun since the temperature can become very high in such a closed environment.

Always store Compact Discs in the holders in which they were sold. Never leave a disc in the player's disc holder for a long period of time.

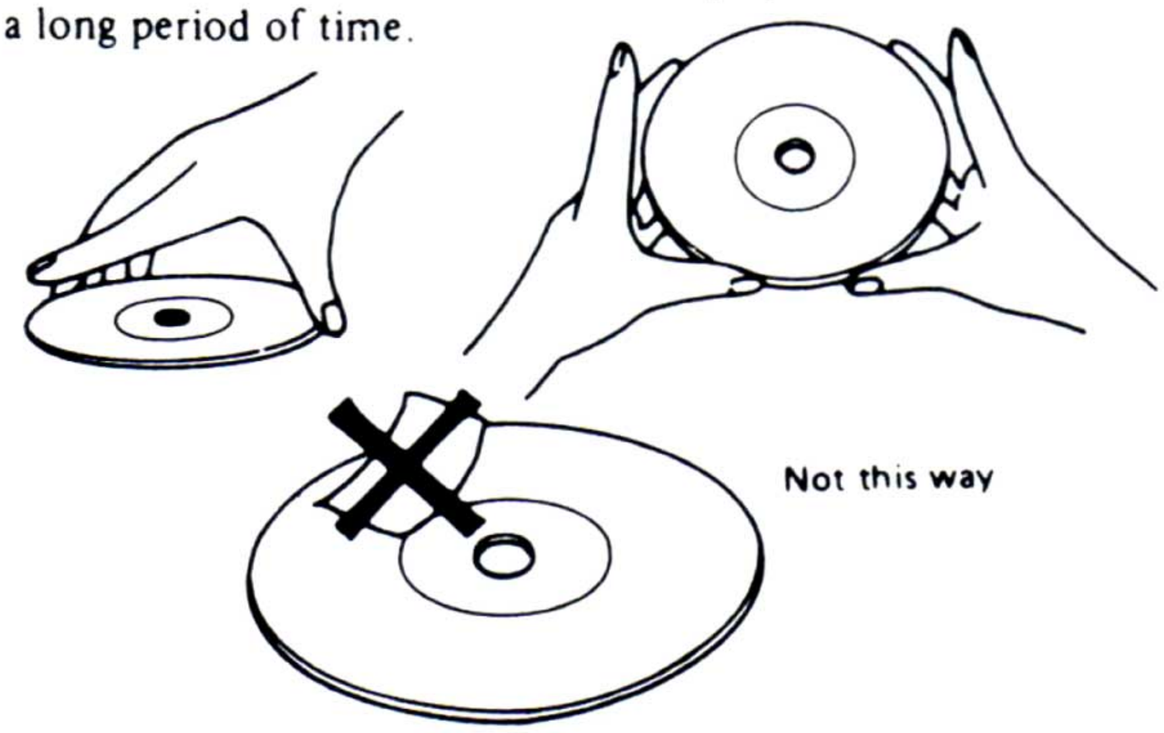

SERVICE PROCEDURES

1. Safety-check out

After correcting the original service problem,perform the following safety check before releasing the set to the customer:

Connect the insulating-resistance tester between the plug of power supply cord and chassis.

Specifications:More than 10Mohm at 500V.

2. Voltage Selector (Back panel)

Worldwide models are equipped with a voltage selector to conform with local power supplies.Be sure to set this switch to match the voltage of the power supply in user's area before turning the power switch on.

Voltage is changed by sliding the groove in the switch with a screw driver to the right or left.

Confirm that the switch has been moved all the way to the right or left before turning the power switch on.

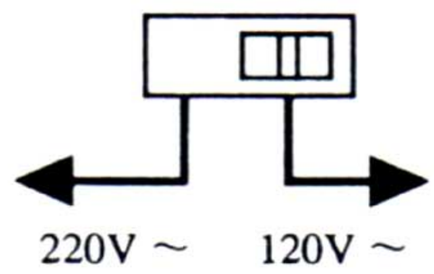

at AC120V

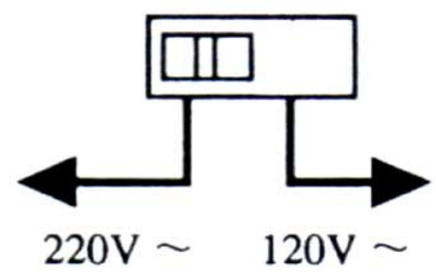

at AC220V

- **Cleaning Compact Discs**

Before playing a disc wipe off the playing surface with a soft cloth to remove dust and other soil. Wipe the surface in straight lines from the center of the disc outward, not in a circular motion as you would with a phonograph record.

Do not use benzene, chemical cleansers or phonograph record cleaning solutions to clean Compact Discs. Also avoid static electricity prevention solutions since they can damage the surface of Compact Discs.

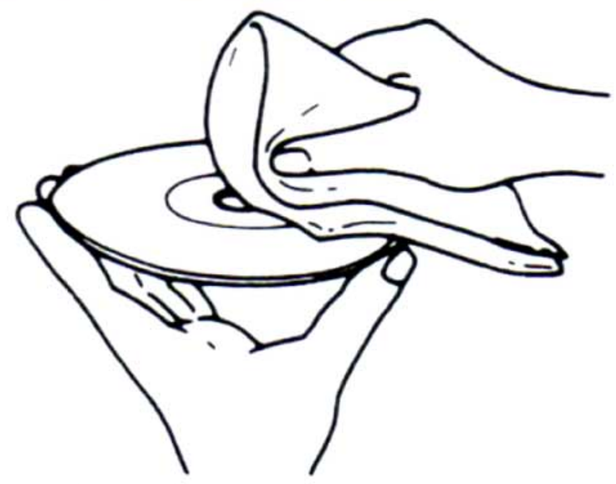

Problems Caused by Dew

Dew can form inside a Compact player when it is brought from a cold environment into a warm room, when a room is rapidly heated and if a player is left in a humid environment.

This dew can prevent the laser pickup from reading the data contained in the pits in the disc surface. If the player does not operate properly because of dew, remove the disc and leave the player's power switch on for about one hour to remove all moisture.

www.hifiengine.com

CAUTION ON REPLACEMENT OF OPTICAL PICKUP

The laser diode in the optical pickup block is so sensitive to static electricity,surge current and etc, that the components are liable to be broken down or its reliability remarkably deteriorated.

During repair,carefulley take the following precautions. (The following precautions are included in the service parts.)

PRECAUTIONS

1.Ground for the work-desk.
Place a conductive sheet such as a sheet of copper (with inpedance lower than 10MΩ) on the work-desk and place the set on the conductive sheet so that the chassis.

2.Grounding for the test equipment and tools.
Test equipments and toolings should be grounded in order that their ground level is the same the ground of the power source.

3.Grounding for the human body.
Be sure to put on a wrist-strap for grounding whose other end is grounded.
Be particularly careful when the workers wear synthetic fiber clothes, or air is dry.

4.Select a soldering iron that permits no leakage and have the tip of the iron well-grounded.

5.Do not check the laser diode terminals with the probe of a circuit tester or oscilloscope.

Care Should be taken with the optical pickup.

The optical pickup is sensitive to static electricity,surge currents,and other high electrical noise, and because there is the possibility of damage to performance, in the handling of the pickup, the utmost care must be taken, particularly with regard to static electricity.

1. When checking the laser terminal, avoid making connections using the probes of a tester or oscilloscope, or an ordinary power supply.

2. When replacing the optical pickup, first short the LD terminals and remove the connector. Also, when attaching the new optical pickup, after attaching the connector, unsolder the LD terminals.

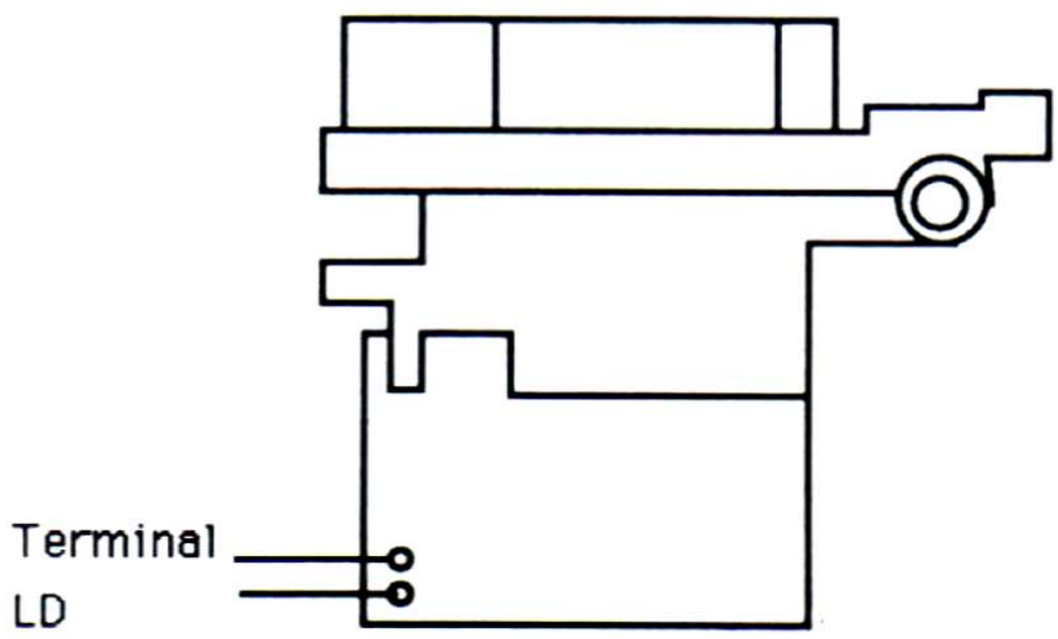

Optical pickup

www.hifiengine.com

PROTECTION OF EYES FROM LASER BEAM DURING SERVICING

This set employs a laser. Therefore, be sure to follow carefully the instructions below when servicing.

WARNING!!

WHEN SERVICING, DO NOT APPROACH THE LASER EXIT WITH THE EYE TOO CLOSELY. IN CASE IT IS NECESSARY TO CONFIRM LASER BEAM EMMISION, BE SURE TO OBSERVE FROM A DISTANCE OF MORE THAN 30cm FROM THE SURFACE OF THE OBJECTIVE LENS ON THE OPTICAL PICK-UP BLOCK.

Laser Diode Properties

- Material: GaAS/GaAlAs
- Wavelength: 780nm
- Emission Duration: continuous
- Laser output: max. 0.5mW*

  *This output is the value measured at a distance about 1.8mm from the objective lens surface on the Optical Pick-up Block.

LASER WARNING LABELS

The label shown below are affixed.

1. **Warning lable**
   These labels are located on the rear panel and the arm of the mechanism.

Ⓐ

DANGER —INVISIBLE LASER RADIATION WHEN OPEN AND INTERLOCK FAILED OR DEFEATED. AVOID DIRECT EXPOSURE TO BEAM

CAUTION —HAZARDOUS LASER AND ELECTROMAGNETIC RADIATION WHEN OPEN AND INTERLOCK DEFEATED

ATTENTION —RAYONNEMENT LASER ET ELECTROMAGNETIQUE DANGEREUX SI OUVERT AVEC L'ECLENCHEMENT DE SECURITE ANNULE.

Ⓑ

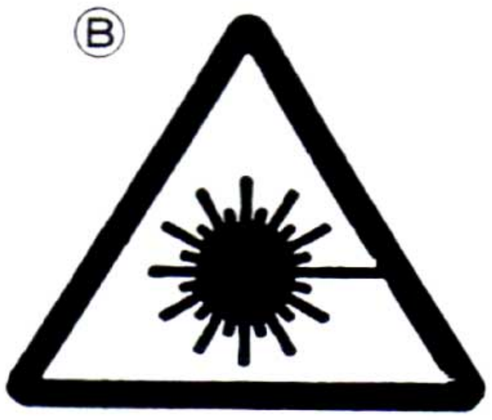

Ⓒ

ADVARSEL: USYNLIG LASERSTRÅLING VED ÅBNING, NÅR SIKKERHEDSAF-BRYDER ER UDE AF FUNKTION. UNDGÅ UDSÆTTELSE FOR STRÅLING.

Ⓓ

VARO!
AVATTAESSA JA SUOJALUKITUS OHITETTAESSA OLET ALTTIINA NÄKYMÄTTÖMÄLLE LASERSÄTEILYLLE. ÄLÄ KATSO SÄTEESEEN.

Ⓔ

VARNING
OSYNLIG LASERSTRÅLNING NÄR DENNA DEL ÄR ÖPPNAD OCH SPÄRREN ÄR URKOPPLAD. BETRAKTA EJ STRÅLEN.

Ⓐ : Danger label
Ⓑ : Except 120V model
Ⓒ : Except 120V model
Ⓓ,Ⓔ,Ⓕ : Only 230V model

Ⓕ

ADVARSEL
USYNLIG LASERSTRÅLING NÅR DEKSEL ÅPNES OG SIKKERHEDSLÅS BRYTES. UNNGÅ EKSPONERING FOR STRÅLEN.

2. **Certification label (120V model)**
   This label is located on the back panel.

PRODUCT IS CERTIFIED BY THE MANUFACTURER TO COMPLY WITH DHHS RULES 21 CFR SUBCHAPTER J APPLICABLE AT THE DATE OF MANUFACTURE

MANUFACTURED

3. **Class 1 label (Except 120V model)**
   This label is located on the back panel.

"CLASS 1 LASER PRODUCT"

LUOKAN 1 LASERLAITE

KLASS 1 LASER APPARAT

ADVARSEL

Denna maekning er anbragt på apparatets højre side og indikerer, at apparatet arbejder med laserstråler af klasse 1, hvilket betyder, at der anvendes laserstråler af svageste klasse, og at man ikke på apparatets yderside kan blive udsat for utilladelig kraftig stråling.

APPARATET BØ/R KUN ÅBNES AF FAGFOLK MED SÈ RLIGT KENDSKAB TIL APPARATER MED LASERSTRÅLER!

Indvendigt i apparatet er anbragt den her gengivne advarselsmérkning, som advarer imod at foretage sådnne indgreb i apparatet, at man kan komme til at udsaette sig for laserstråling.

VAROITUS! LAITTEEN KÄYTTÄMINEN MUULLA KUIN TÄSSA KÄYTTÖOHJEESSA MAINTULLA TAVALLA SAATTAA ALTISTAA KÄYTTÄJÄN TURVALLISUUSLUOKAN 1 YLITTÄVÄLLE NÄKYMÄTTÖMÄLLE LASERSÄTEILYLLE.

www.hifiengine.com

MECHANISM-EXPLODED VIEW

PICKUP DRIVE UNIT

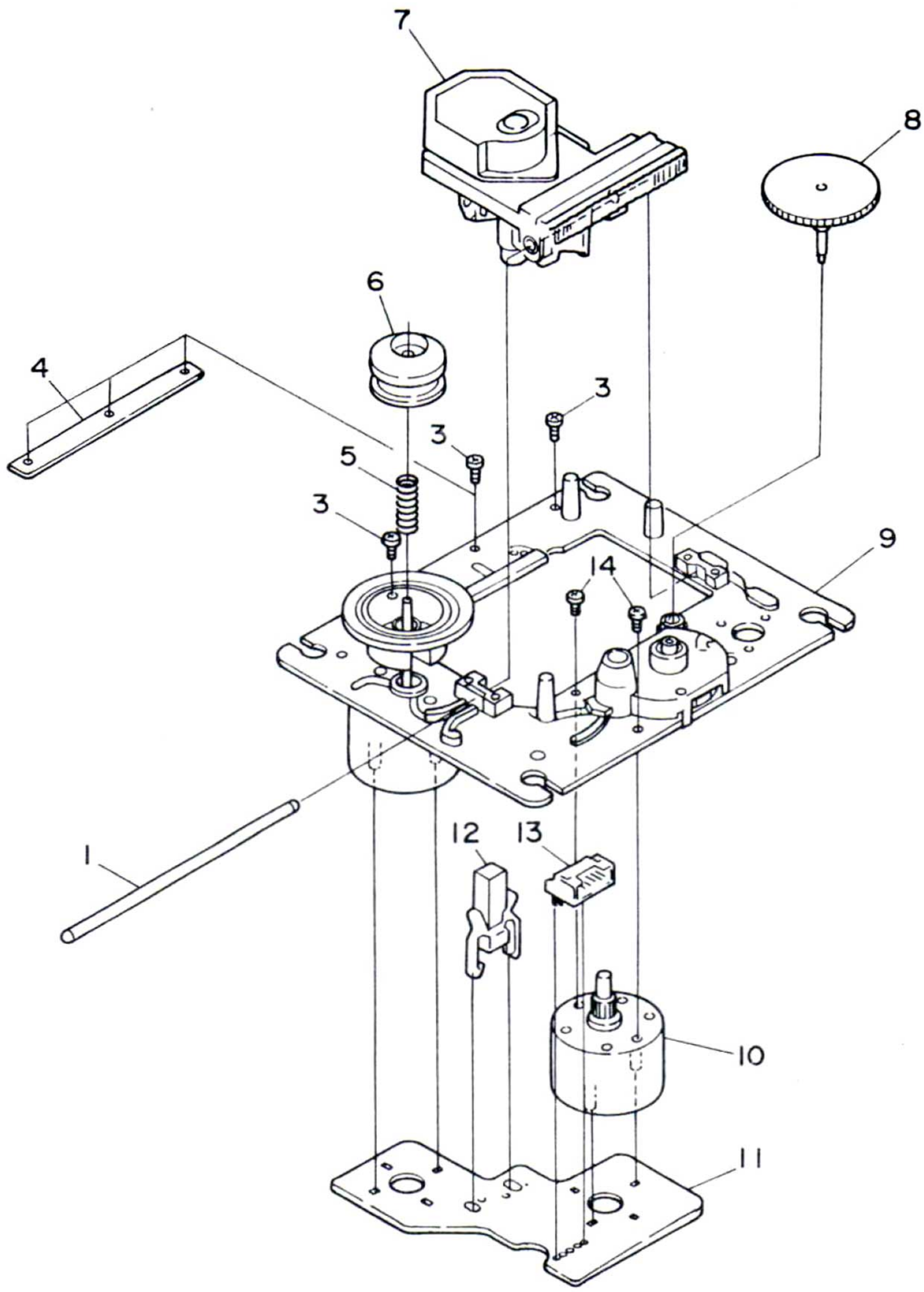

PARTS LIST

REF.NO.	PART NO.	DESCRIPTION	REF.NO.	PART NO.	DESCRIPTION
1	24828003	Sled shaft	8	24810006	Wheel
2			9	24802003	Turntable chassis
3	801425	2×5,Self-tapping screw	10	24804004	Motor gear
4	24822004	Plate	11	24840007	Motor pc board
5	24820003	Spring	12	24840008	Leafswitch
6	24822005	Center ring	13	25050396	NSCT-4P223,Connector
7	24110008	KSS-210A,Optical pickup	14	82142003	2P+3F(BC),Pan head screw

www.hifiengine.com

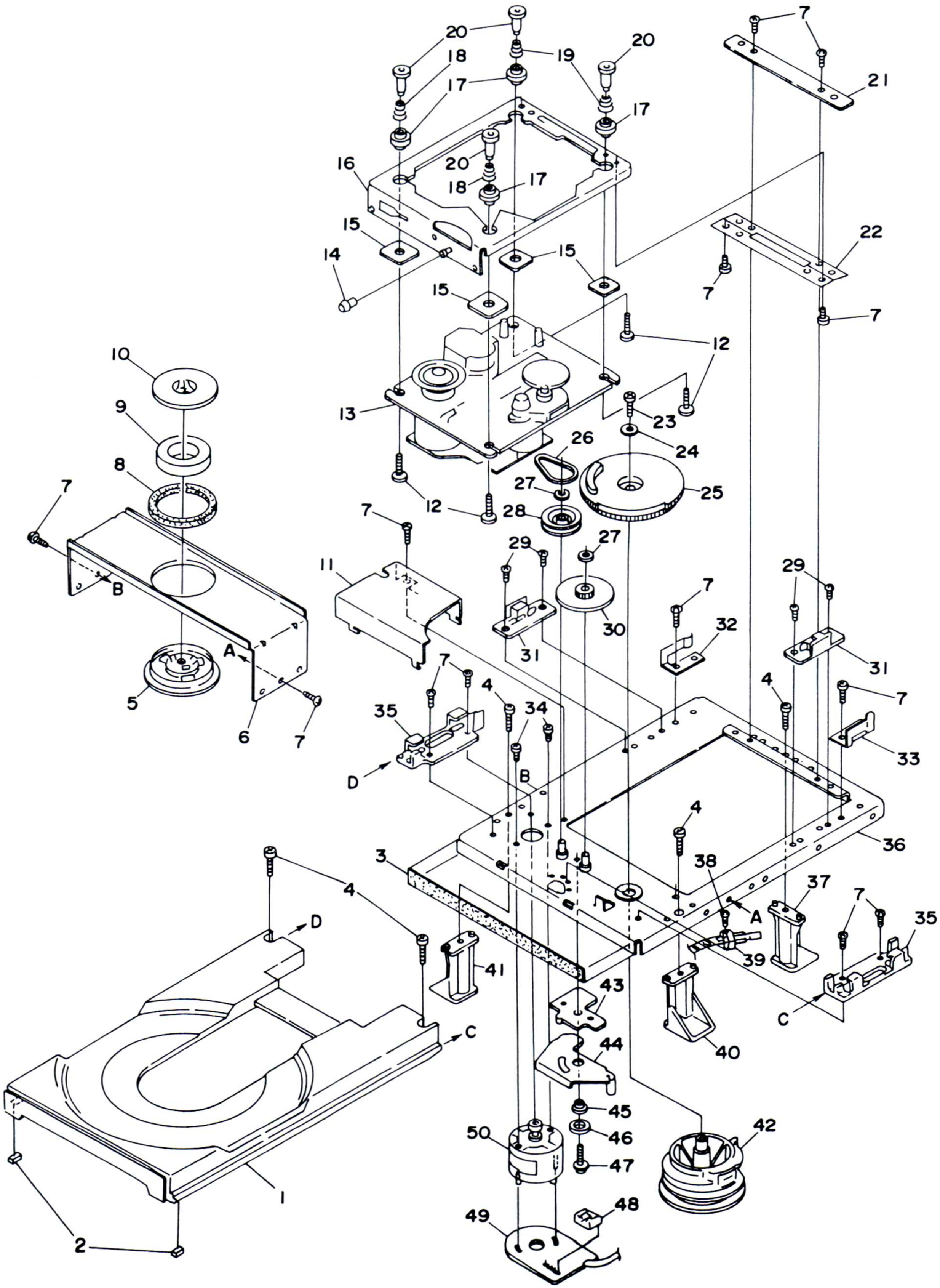

www.hifiengine.com

PARTS LIST

REF.NO.	PART NO.	DESCRIPTION	REF.NO.	PART NO.	DESCRIPTION
1	24506878	Tray	26	24602507	Belt
2	24506897	Damper	27	870144	Washer
3	28140980	Front tape	28	24506884	Loading pulley
4	838430108	3TTB+10B(BC),Self-tapping screw	29	833120047	2TTP+4S,Tapping screw
5	24506959	Chucking pulley	30	27301227	Middle gear
6	24506876	Chucking chassis	31	27301230	Tray holder
7	834126069	2.6TTS+6C,Self-tapping screw	32	24506888	Tray guide,left
8	24818004	Yoke damper	33	24506887	Tray guide,right
9	24832003	Magnet	34	838426038	2.6TTB+3C(BC),Self-tapping screw
10	24830001	Chucking yoke	35	27301228	Tray holder,front
11	24506879	Gear cover	36	27301224	Main chassis
12	801424	Screw with washer	37	24506890	Boss,back
13		KSM-2101AAM,Pickup drive unit	38	834120049	2TTS+4C,Self-tapping screw
14	24506870	Roller	39	25065402	Leafswitch
15	24506871	Plate	40	24506889	Boss,right
16	24506898	Sub chassis	41	24506890	Boss,left
17	24509401	Insulator	42	24506883	Control cam
18	27180442	Spring A	43	24506892	Link plate
19	27180441	Spring B	44	24506894	Stopper link
20		Shaft	45	24506893	Boss
21	24506864	Hinge holder	46	24506895	Spacer
22		Hinge	47	83112608	2.6TTW+8S,Self-tapping screw
23	838426108	2.6TTB+10B(BC),Self-tapping screw	48	25050393	Connector pin
24	8761301008	W3×10F,Washer	49	24505269	Motor pc board
25	24506882	Drive gear	50	24506886	Motor ass'y

REMOVEMENT OF DISC TRAY

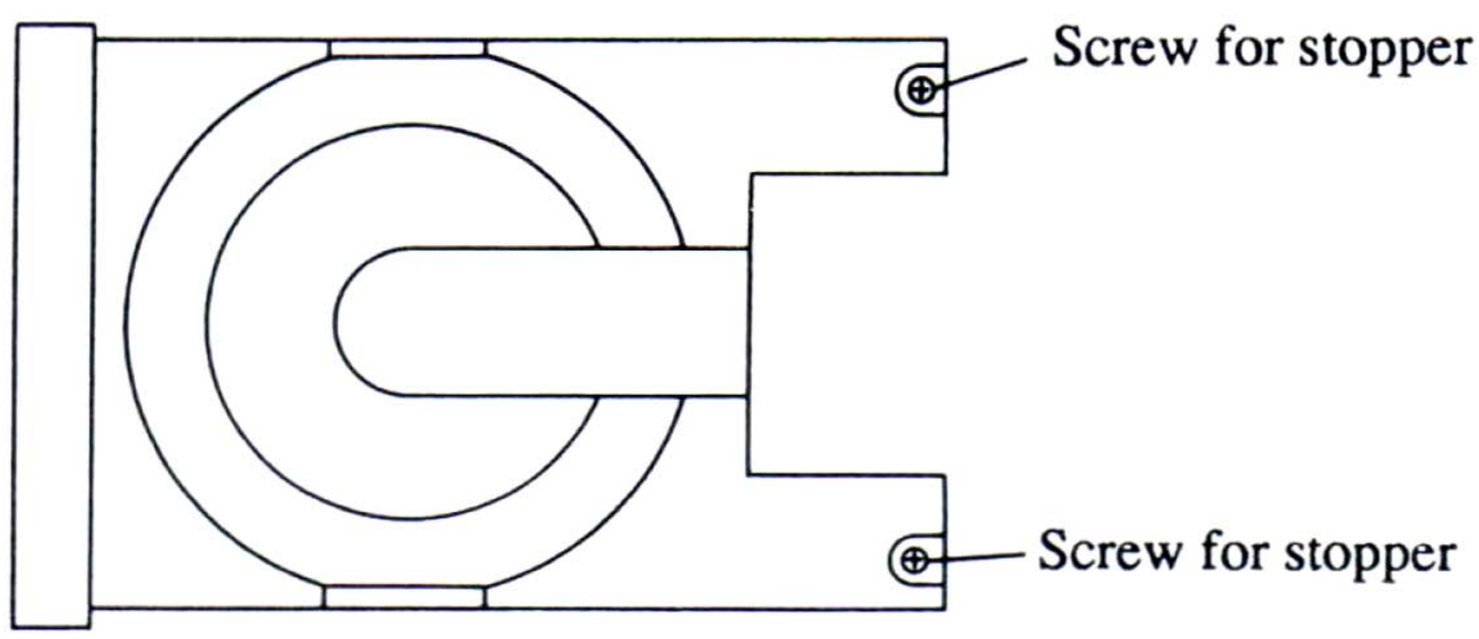

1. Loosen the screw for stopper until the head of screw and the tray are the same height.
2. Turn POWER switch to on.
3. Prees OPEN/CLOSE button to open the tray.
4. Turn POWER switch to off.
5. Remove the tray.

www.hifiengine.com

CHASSIS-EXPLODED VIEW

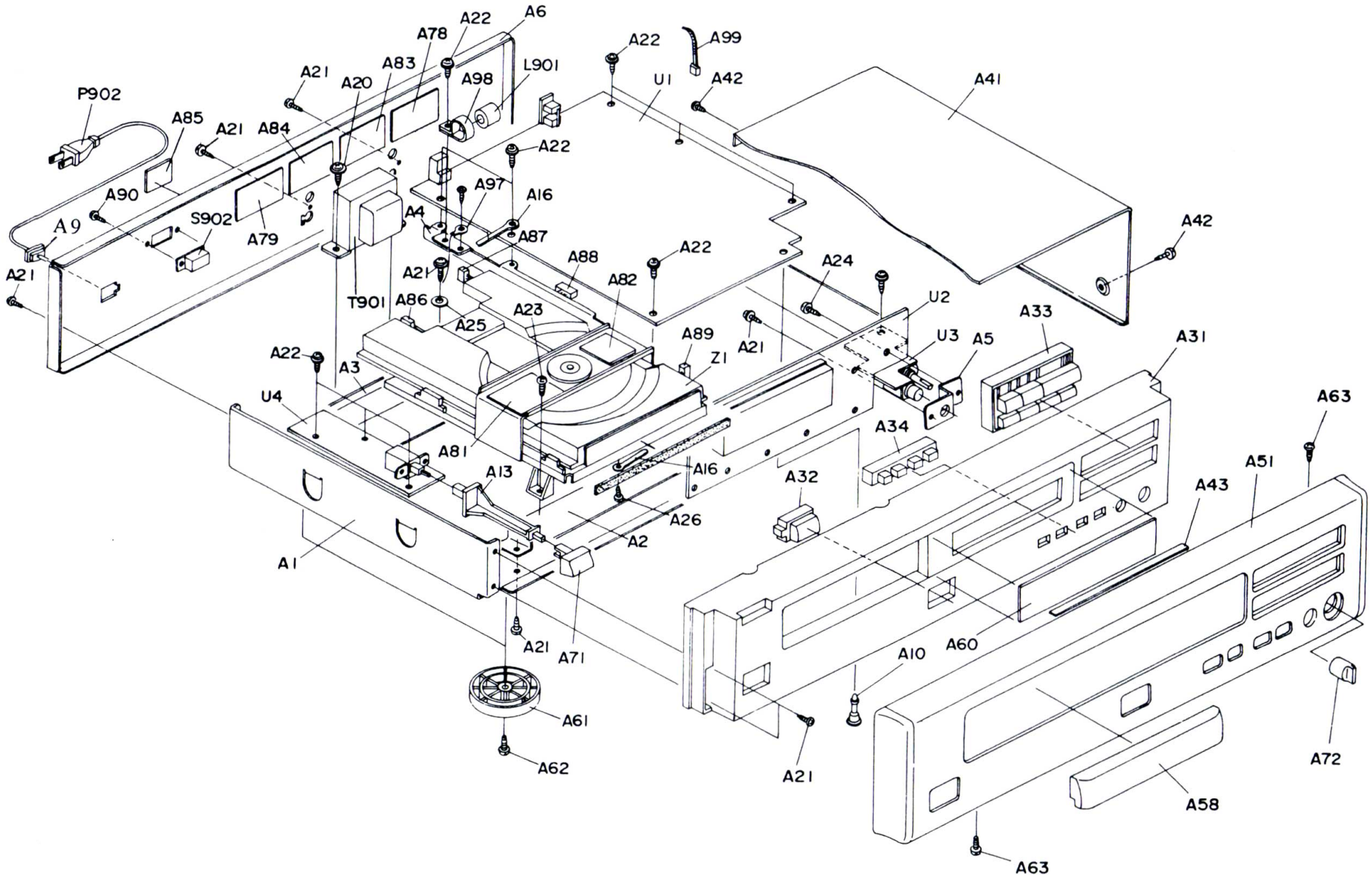

www.hifiengine.com

PARTS LIST

REF.NO.	PART NO.		DESCRIPTION
A1	27100227BY		Chassis
A2	27141520Y		Bracket F
A3	27141521Y		Bracket R
A4	27130642Y		Bracket C
A5	27141519Y		Bracket HP
A6	27121701AY		Rear panel <D>
	27121702AY		Rear panel <P>
	27121704AY		Rear panel <W>
	27121705AY		Rear panel <Q>
A9	27300750	⚠	Bushing
A10	27190524		KGLS-14R,Holder
A13	27273149Y		Joint,power
A16	27255012		CA-8,Clip
A20	830440069		4TTC+6C(BC),Self-tapping screw
A21	834430088		3TTS+8B(BC),Self-tapping screw
A22	831130088		3TTW+8B,Self-tapping screw
A24	833430080		3TTP+8P(BC),Self-tapping screw
A25	87643010		W3×10F(BC),Washer
A26	834426068		2.6TTS+6B(BC),Self-tapping screw
A31	27110687AY		Front bracket ass'y <B>
	27110688AY		Front bracket ass'y <S>
A32	28324562Y		Knob,open <B>
	28324563B		Knob,open <S>
A33	28324568Y		Knob,play <B>
	28324569B		Knob,play <S>
A34	28324566Y		Knob,memory <B>
	28324567Y		Knob,memory <S>
A41	28184469Y		Top cover
A42	834430088		3TTS+8B(BC),Self-tapping screw
A43	28140680		0.5×8×180,Cushion
A51	1H216701K		Front panel ass'y <B>
	1H217701K		Front panel ass'y <S>
	28125222AY		End cap L
	28125223AY		End cap R
A58	27211396Y		Tray panel <B>
	27211398		Tray panel <S>
A60	28191649Y		Clear plate
A61	27175254		Leg
A62	834430088		3TTS+8B(BC),Self-tapping screw
A63	833430080		3TTP+8P(BC),Self-tapping screw
A71	28324140		Knob,power <B>
	28324184		Knob,power <S>

REF.NO.	PART NO.		DESCRIPTION
A72	28324564Y		Knob,level <B>
	28324565Y		Knob,level <S>
A78	29361507		Label NOR <P>
A79	29361342A		Label SEM/FIN <P>
A81	29360807		Label DANGER
A82	29361218		Label LASER <P/W/Q>
A83	29360811A		Label <P>
A84	29361298A		Label SEM <P>
A85	29360687		Label CLASS1 <P/W/Q>
A86	2000951		NSAS-8P903,Socket
A87	2000952		NSAS-8P904,Socket
A88	2002390810		NSAS-8P0120,Socket
A89	2002391020		NSAS-10P0119,Socket
A90	82143006		3P+6FN(BC),Pan head screw <W>
A97	2061112100		Cord ass'y
A98	260221		NK-10N, Clamp
A99	260208		Binder
L901	230907	⚠	TR-16-8-16,Core
P902	253173Y	⚠	AS-UC-7#18,Power supply cord <D>
	253164Y or	⚠	AS-CEE250V2.5A,
	253149	⚠	Power supply cord <P/W>
	253170	⚠	Power supply cord <Q>
S902	25065123	⚠	NSS-1258P,Voltage selector switch <W>
T901	2300291	⚠	NPT-991D,Power transformer <D>
	2300773Y	⚠	NPT-991P,Power transformer <P>
	2300774Y	⚠	NPT-991DG,Power transformer <W>
	2300293Y	⚠	NPT-991Q,Power transformer <Q>
U1	1H216515-1		NAAR-4715-1,Main circuit pc board ass'y <D>
	1H216515-1A		NAAR-4715-1A,Main circuit pc board ass'y <P/W/Q>
U2	1H216516-1		NADIS-4716-1,Display circuit pc board ass'y
U3	1H216517-1		NAAF-4717-1,Headphone amplifier pc board ass'y
U4	1H216518-1		NAPS-4718-1,Power supply circuit pc board ass'y
Z1	24800001Y		NCD-113S,CD mechanism ass'y

NOTE: <B>:Black model only
<S>:Silver model only
<D>:120V model only
<P>:230V model only
<W>:Worldwide model only
<Q>:240V model only

NOTE: THE COMPONENTS IDENTIFIED BY MARK ⚠ ARE CRITICAL FOR RISK OF FIRE AND ELECTRIC SHOCK. REPLACE ONLY WITH PART NUMBER SPECIFIED.

www.hifiengine.com

IC BLOCK DIAGRAM AND DESCRIPTIONS

CXA1571S (RF Amp)

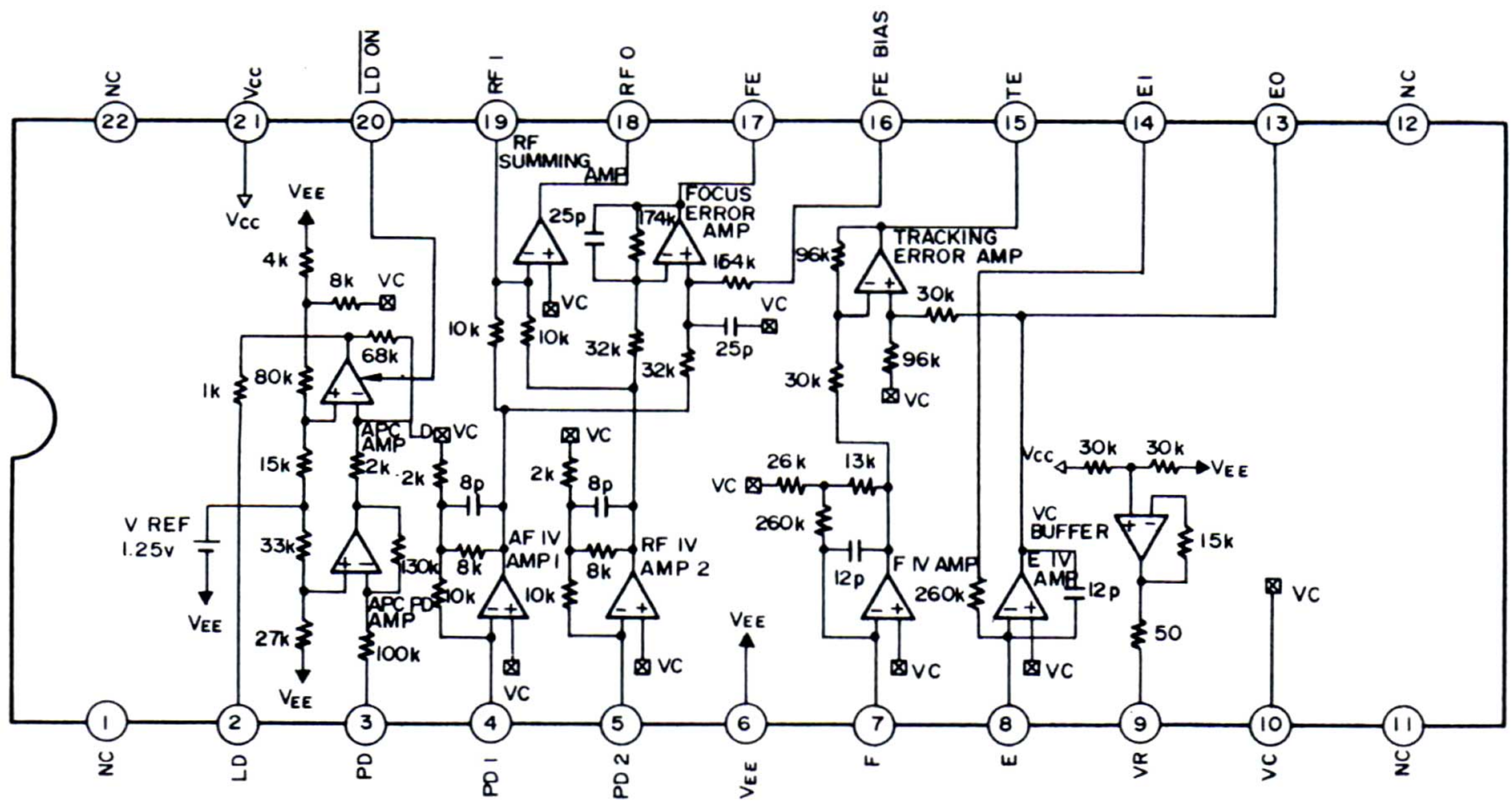

Pin No.	Symbol	I/O	Description
2	LD	O	Output terminal of APC amplifier.
3	PD	I	Input terminal of APC amplifier.
4	PD1	I	Inversion input terminal for RF I-V amplifier. Connect to photo diode A+C.
5	PD2	I	Inversion input terminal for RF I-V amplifier. Connect to photo diode B+D.
7	F-IN	I	Inversion input terminal for F I-V amplifier. Connect to photo diode F.
8	E-IN	I	Inversion input terminal for E I-V amplifier. Connect to photo diode E.
9	VR	O	DC voltage output of (Vcc+V_{EE})/2.
10	VC	I	Middle point voltage input terminal.
13	EO	O	Monitor output terminal for I-V amplifier E.
14	EI	-	Gain adjustment terminal for I-V amplifier E.
15	TE	O	Tracking error amplifier output terminal. The signal E-F is output from this terminal.
16	FE-BIAS	I	Bias adjustment terminal for non-inversion side of focus error amplifier.
17	FE	O	Focus error amplifier output terminal.
18	RFO	O	RF amplifier output terminal.
19	RFI	I	Inversion input terminal of RF amplifier.
20	LD-ON	I	Change-over terminal for APC amplifier.

www.hifiengine.com

CXA1372S (Servo Signal Processor)

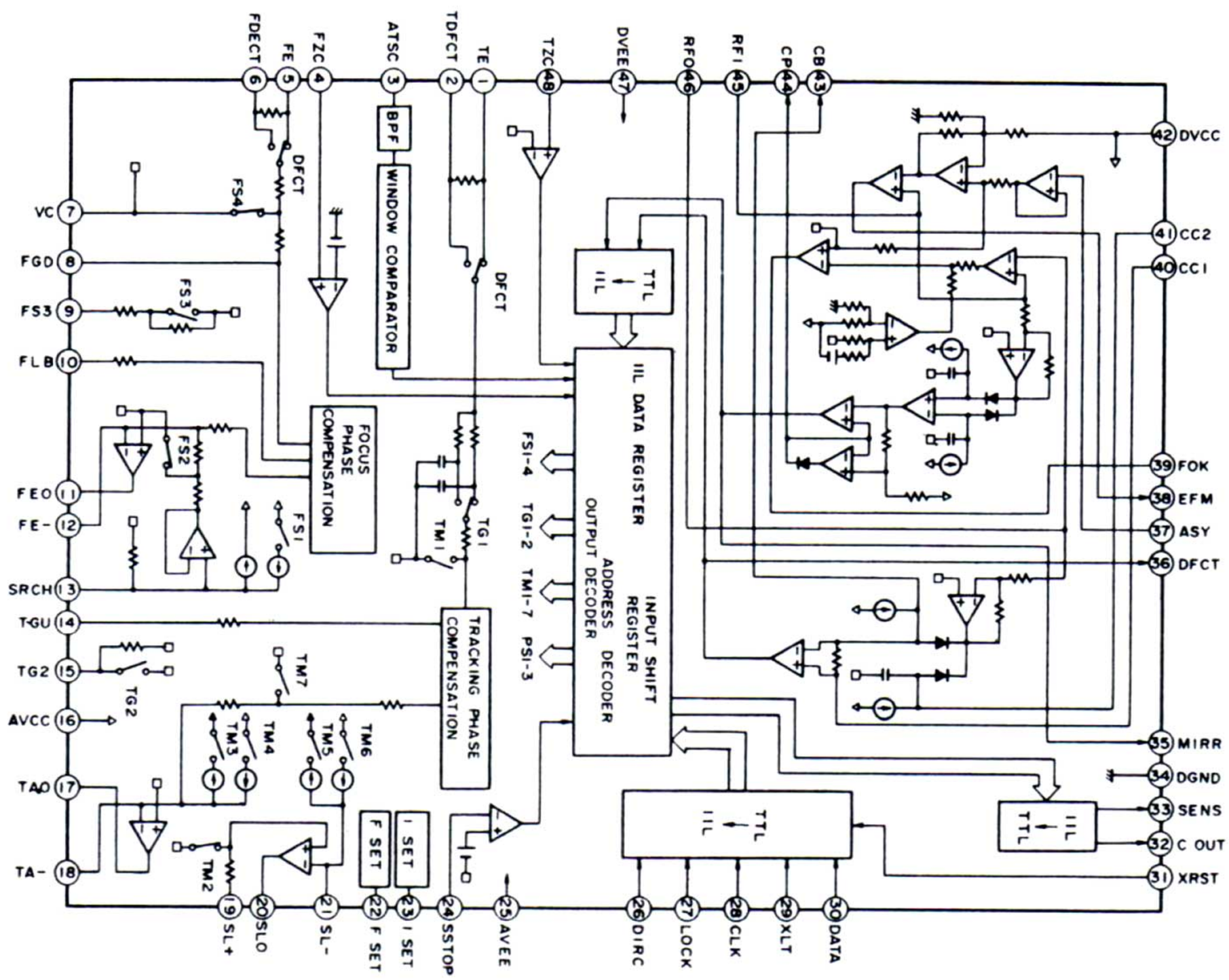

PIN. NO.	SYMBOL	I/O	DESCRIPTION
1	TE	I	Tracking error input terminal.
2	TDFCT	I	Capacitor connection terminal for time constant when defect.
3	ATSC	I	Window comparator input terminal for ATSC detection.
4	FZC	I	Focus zero-cross comparator input terminal.
5	FE	I	Focus error input terminal.
6	FDFCT	I	Capacitor connection terminal for time constant when detect.
7	VC	I	Mid-point voltage input terminal.
8	FGD	I	Connect the capacitor between pin 9 and this pin when the high frequency gain of focus servo is dropped.
9	FS3	I	Focus servo high frequency gain changeover input terminal.
10	FLB	I	Input terminal for the low frequency boost of focus servo.
11	FEO	O	Focus drive output terminal.
12	FE-	I	Inversion input terminal of focus amplifier.
13	SRCH	I	Time constant terminal to make the focus search waveform.
14	TGU	I	Tracking high frequency gain changeover input terminal.
15	TG2	I	Tracking high frequency changeover input terminal.
17	TAO	O	Tracking drive output terminal.
18	TA-	I	Inversion input terminal of tracking amplifier.
19	SL+	I	No-inversion input terminal of sled amplifier.
20	SLO	O	Sled(slide) drive output terminal.
21	SL-	I	Inversion input terminal of sled amplifier.

PIN. NO.	SYMBOL	I/O	DESCRIPTION
22	FSET	I	Peak setting input of phase correction of focus tracking.
23	ISET	I	This terminal is flowed the current so that the focus search, tracking jump, and sled kick height is decided.
24	SSTOP	I	Inner switch selection input terminal.
26	DIRC	I	This terminal is used when a track jump.
27	LOCK	I	The sled runaway prevention circuit operates at the low level.
28	CLK	I	Serial data transfer clock input from microprocessor.
29	XLT	I	Latch input from microprocessor.
30	DATA	I	Serial data input from microprocessor.
31	XRST	I	Reset input terminal. Active low.
32	C. OUT	O	Signal output to count the track numbers.
33	SENS	O	This terminal outputs FZC, and SSTOP to according command from microprocessor.
35	MIRR	O	Mirror comparator output terminal.
36	DFCT	O	Defect comparator output terminal.
37	ASY	I	Auto asymmetry control input terminal.
38	EFM	O	EFM comparator output terminal.
39	FOK	O	Focus OK comparator output terminal.
40	CC1	O	Defect bottom hold output terminal.
41	CC2	I	Defect bottom hold input terminal from CC1.
43	CB	I	Defect bottom hold capacitor connection terminal.
44	CP	I	Mirror hold capacitor connection terminal.
45	RFI	I	RF summing amplifier input terminal.
46	RFO	O	RF summing amplifier output terminal.
48	TZC	I	Tracking zero-cross comparator input terminal.

www.hifiengine.com

CXD2500AQ (Digital Signal Processor)

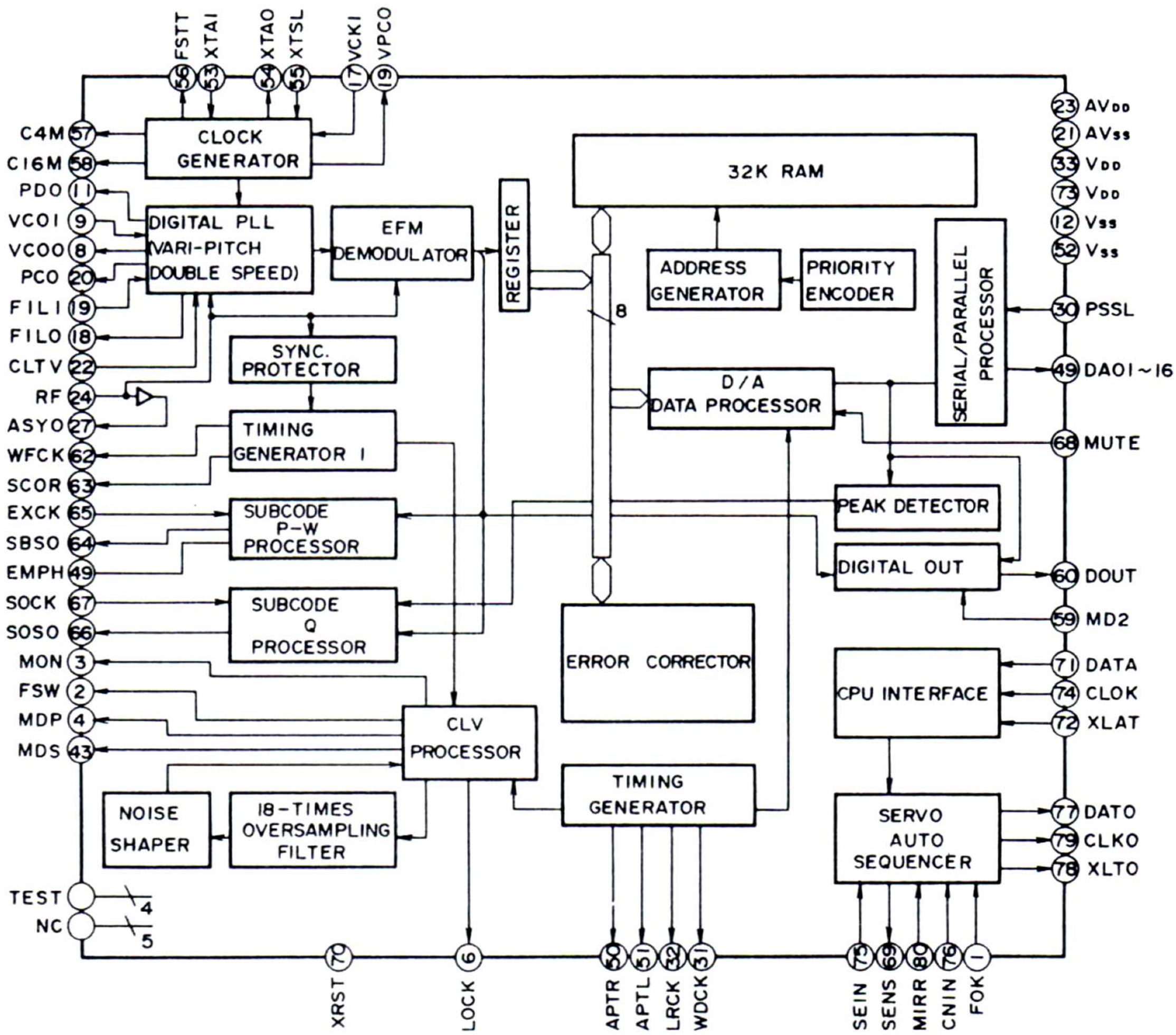

www.hifiengine.com

NO.	SYMBOL	I/O	DESCRIPTION	
1	FOK	I	Foucs Ok input	
2	FSW	O	Output filter changeover output for spindle motor	
3	MON	O	Spindle motor control output	
4	MDP	O	Spindle motor servo control	
5	MDS	O	Spindle motor servo control	
6	LOCK	O	H when GFS is the high level	
7	NC			
8	VCOO	O	Oscillation circuit output for analog EFM PLL.	
9	VCOI	I	Oscillation circuit input for analog EFM PLL. (8.6436MHz)	
10	TEST	I	Test terminal	
11	PDO	O	Charge pump output analog EFM PLL	
12	Vss		Ground terminal	
13-15	NC			
16	VPCO	O	PLL charge pump output for variable pitch	
17	VCKI	I	Clock input for variable pitch from VCO (16.934MHz)	
18	FILO	O	Filter output for master PLL.	
19	FILI	I	Filter input for master PLL.	
20	PCO	O	Charge pump output of master PLL	
21	AVss		Analog ground	
22	CLTV	I	VCO control voltage input for master	
23	AVDD		Analog section power supply (+5V)	
24	RF	I	EFM signal input	
25	BIAS	I	Asymmetry circuit constant current input	
26	ASYI	I	Asymmetry comparator voltage input	
27	ASYO	O	EFM full swing output	
28	ASYE	I	Asymmetry control circuit	
29	NC			
30	PSSL	O	Audio data output mode changeover input Serial data at L and paraller data at H.	
31	WDCK	I	D/A interface for 48 bits slot. Word clock f=2Fs.	
32	LRCK	I	D/A interface for 48 bits slot. LR clock f=Fs.	
33	VDD		Power supply terminal (+5V)	
34-49			Data output terminals	
			PSSL=1	PSSL=0
34	DA16	O	DA16	Serial data of 48 bits slot
35	DA15	O	DA15	Bit clock of 48 bits slot
36	DA14	O	DA14	Serial data of 64 bits slot
37	DA13	O	DA13	Bit clock of 68 bits slot
38	DA12	O	DA12	LR clock of 68 bits slot
39	DA11	O	DA11	GTOP output
40	DA10	O	DA10	XUGF output
41	DA09	O	DA09	XPLCK output

NO.	SYMBOL	I/O	DESCRIPTION	
42	DA08	O	DA08	GFS output
43	DA07	O	DA07	RFCK output
44	DA06	O	DA06	C2P0 output
45	DA05	O	DA05	XRAOF output
46	DA04	O	DA04	MNT 3 output
47	DA03	O	DA03	MNT 2 output
48	DA02	O	DA02	MNT 1 output
49	DA01	O	DA01	MNT 0 output
50	APTR	O	Control output for aperture correction. H when R ch.	
51	APTL	O	Control output for aperture correction. H when L ch.	
52	Vss		Ground terminal	
53	XTAI	I	Crystal oscillation circuit input of 16.9344MHz or 33.8688MHz input.	
54	XTAO	O	Crystal oscillation circuit output of 16.9344MHz.	
55	XTSL	I	Crystal selection input terminal. L when 16.9344MHz. H when 33.8688MHz.	
56	FSTT	O	2/3 divided output of pins 53 and 54.	
57	C4M	O	4.2336 MHz output	
58	C16M	O	16.9344 MHz output	
59	MD2	I	Digital output control input. On at high level.	
60	DOUT	O	Digital output	
61	EMPH	O	Emphasis control output. Active high.	
62	WFCK	O	Write frame clock output	
63	SCOR	O	Sub-code detection output. H when is detected SO or SI.	
64	SBSO	O	Serial output of sub-code (P～W)	
65	EXCK	I	Clock input for read out SQSO.	
66	SQSO	O	Sub Q 80 bits, PCM peak, and level data 16 bits output.	
67	SQCK	I	Clock input for read out SQSO	
68	MUTE	O	Muting control output. Active H.	
69	SENS	-	Sens output. Output to the microprocessor	
70	XRST	I	System reset. Reset at the low level.	
71	DATA	I	Serial data input from the microprocessor.	
72	XLTA	I	Latch input from the microprocessor. Latch the serial data at the trailing.	
73	VDD		Power supply treminal	
74	CLOK	I	Serial data transfer clock input from microprocessor	
75	SEIN	I	Sens input from SSP	
76	CNCI	I	Track jump numbers count signal input	
77	DATO	O	Serial data output to SSP	
78	XLTO	O	Serial data latch output to SSP. Latch at trailing.	
79	CLKO	O	Serial data transfer clock output to SSP.	
80	MIRR	I	Mirror signal input	

Note:SSP:Q104 CXA1372S

www.hifiengine.com

CXP50112 -197Q (Microprocessor)

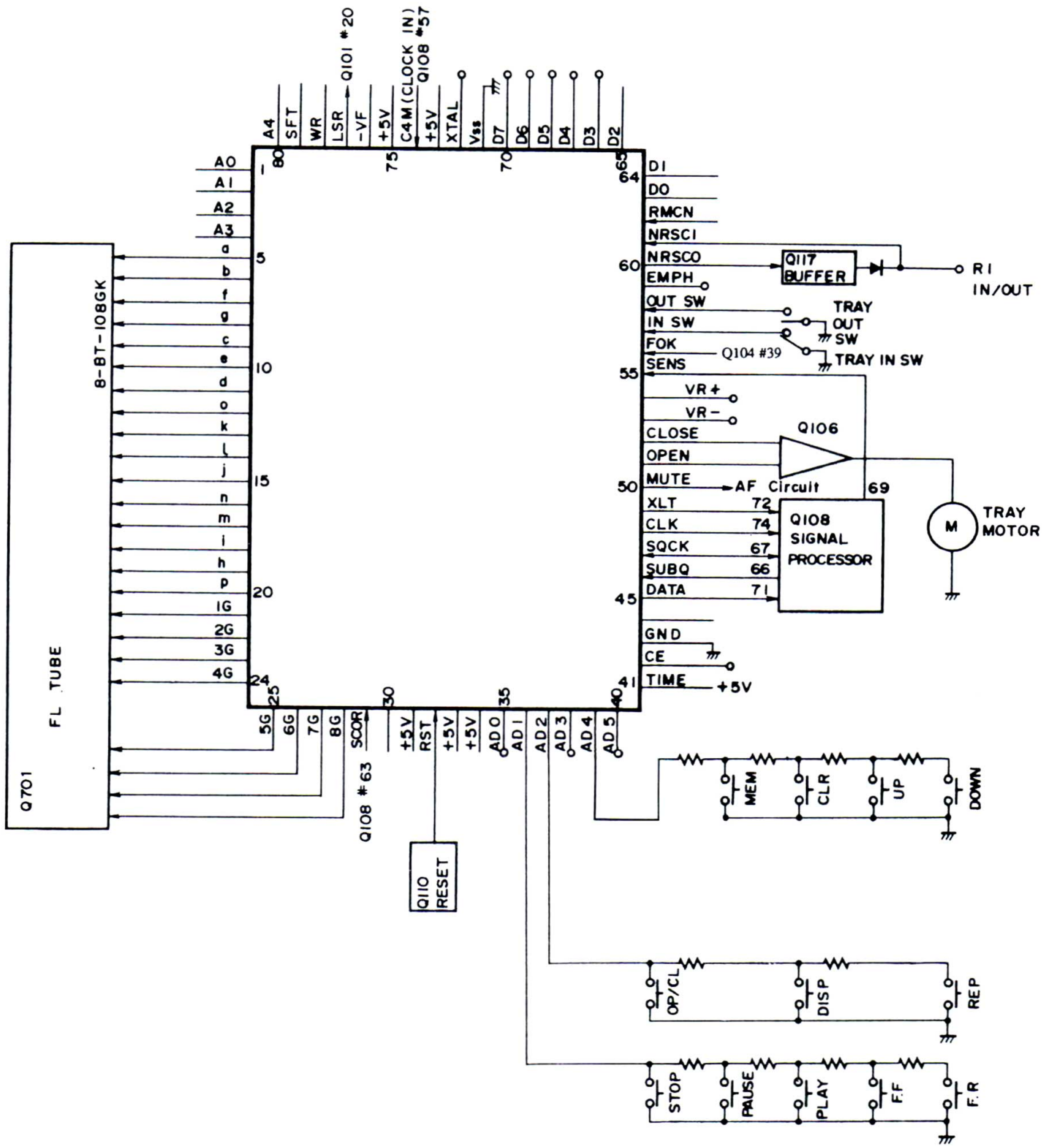

M51943ASL (Rest IC)

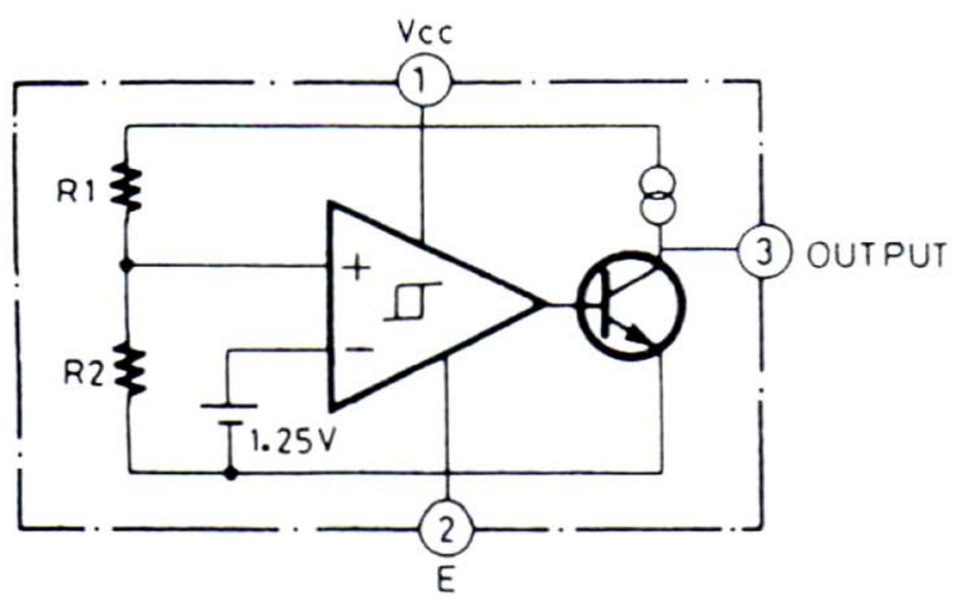

www.hifiengine.com

Pin No.	Symbol	Description
1～4	A0～A3	Music file control signal.Not used.
5～20	a～p	Fluorescent indicator tube segment drive output terminals.
21～28	1G～8G	Fluorescent indicator tube grid drive output terminals.
29	SCOR	Synchronizing signal detection input terminal of sub code frame.
31	5V	
32	RST	Reset input terminal.Reset at the low level.
33,34	5V	
35～40	AD0～AD5	AD input terminal.Connect to the operation key.
41	TIME	Timer switch connection terminal.Not used.
42	CE	Chip enable terminal.
43	GND	
45	DATA	Serial data output terminal.
46	SUBQ	Subcode Q input terminal.
47	SQCK	Subocde Q read clock input/output terminal.
48	CLK	Serial data transmission clock output terminal.
49	XLT	Command execution output terminal.
50	MUTE	Muting ON/OFF control output terminal.ON at the high level.
51	OPEN	Tray open control output terminal.Open at the low level.
52	CLOSE	Tray close control output terminal.Close at the low level.
53	VR-	Volume control output.Not used.
54	VR+	Volume control output.Not used.
55	SENS	Interface of signal processor and microprocessor ICs.
56	FOK	Focus OK input terminal.Focus OK at the high level.
57	INSW	Tray close detection input terminal.
58	OUTSW	Tray open detection input terminal.
59	EMPH	Emphasis ON/OFF control output terminal.On at the high level.
60	NRSCO	Remote control signal (RI signal) output terminal.
61	NRSCI	Remote control signal (RI signal) input terminal.
62	RMCN	Remote control signal input terminal.
63～70	D0～D7	Music file control signal.Not used.
71	Vss	Ground terminal.
72	XTAL	Clock output terminal.
73	5V	
74	C4M	System clock input terminal.
75	5V	
76	VF	Negative power supply terminal for fluorescent indicator tube.
77	LSR	Optical pickup control output terminal.On at the low level.
78	WR	Music file control signal.Not used.
79	SFT	Music file control signal.Not used.
80	A4	Music file control signal.Not used.

www.hifiengine.com

TC9237BN (D/A Converter)

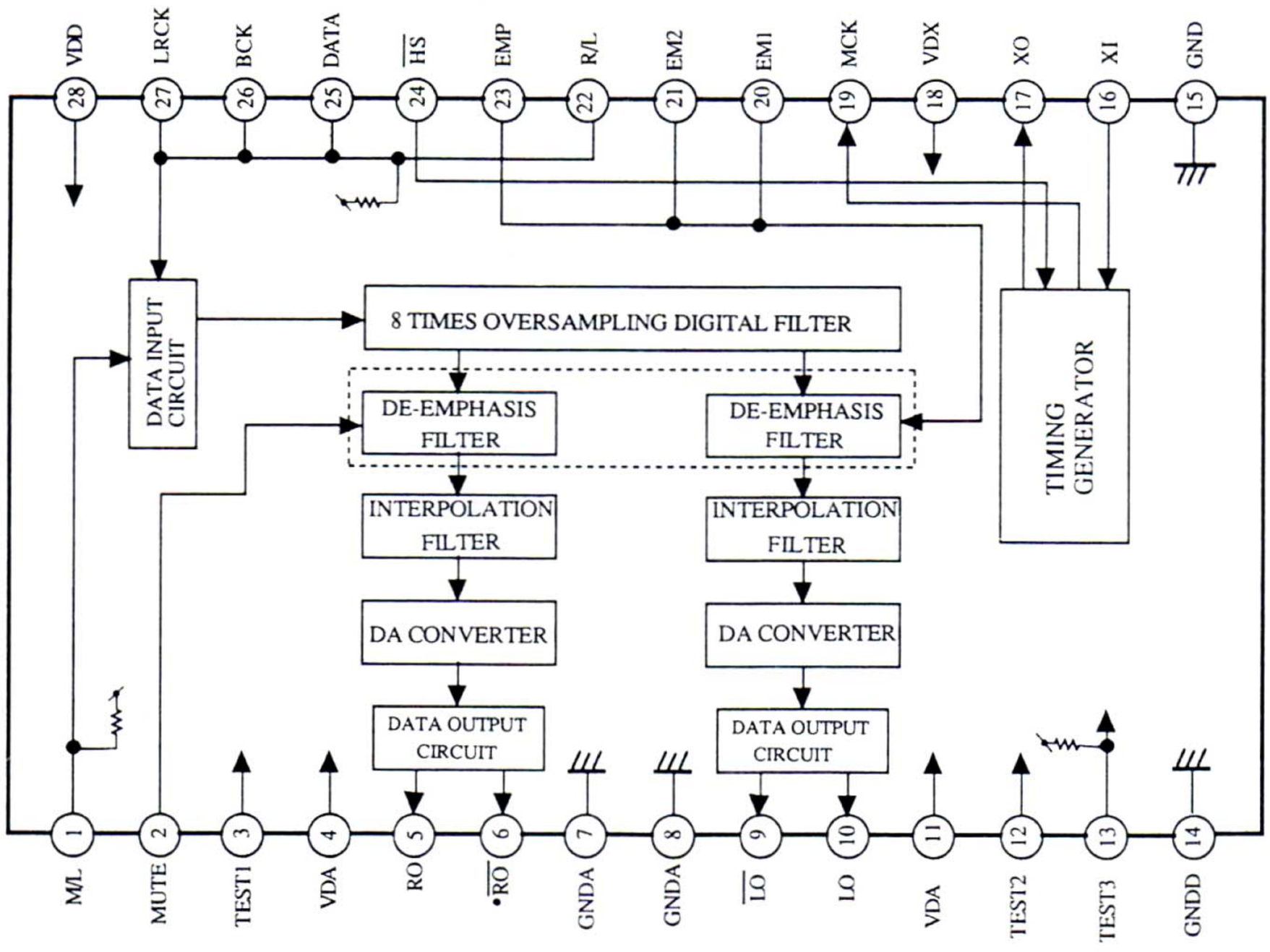

No.	Symbol	I/O	Description
1	M/L	I	Selection terminal for input data. MSB first at the high level and LSB first at the low level.
2	MUTE	I	Muting terminal.ON at the high level.
3	TEST1	I	Test terminal
4	VDA	-	Analogue section power supply terminal for DA converter.(Right channel)
5	RO	O	Non inversion output terminal of right channel data.
6	$\overline{RO}$	O	Inversion output terminal of right channel data.
7	GNDA	-	Ground terminal for DA converter.(Right channel)
8	GNDA	-	Ground terminal for DA converter.(Left channel)
9	$\overline{LO}$	O	Inversion output terminal of left channel data.
10	LO	O	Non inversion output terminal of left channel data.
11	VDA	-	Analogue power supply for DA converter
12	TEST2	I	Test terminal
13	TEST3	I	Test terminal
14	GND	-	Ground terminal for logic section
15	GNDX	-	Ground terminal for oscillator section
16	XI	I	Crystal oscillation connection terminal.
17	XO	O	
18	VDX	-	Power supply for oscillation section
19	MCK	O	System clock output terminal.(384fs)

No.	Symbol	I/O	Description
20	EM1	I	Selection terminal for de-emphasis filter mode.
21	EM2	I	

EM1	L	L	H	H
EM2	L	H	H	L
MODE	44.1kHz		32kHz	48kHz

No.	Symbol	I/O	Description
22	R/L	I	Selection terminal for channel data

R/L INPUT	LRCK L	LRCK H
L	R ch. data	L ch. data
R	L ch. data	R ch. data

No.	Symbol	I/O	Description
23	EMP	I	Changeover terminal for de-emphasis filter. ON at the high level and OFF at the low level.
24	$\overline{HS}$	I	Speed mode selection terminal.Standard speed at the high level and twice speed at the low level.
25	DATA	I	Data input terminal
26	BCK	I	Bit clock input terminal
27	LRCK	I	LR clock input terminal
28	VDD	-	Power supply terminal for logic circuit

www.hifiengine.com

STA341M-L (Transistor Array)

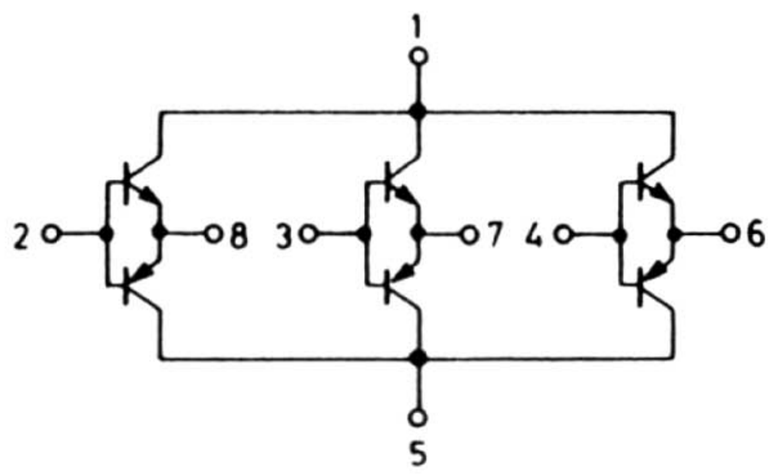

LA6510 (Power OP Amp)

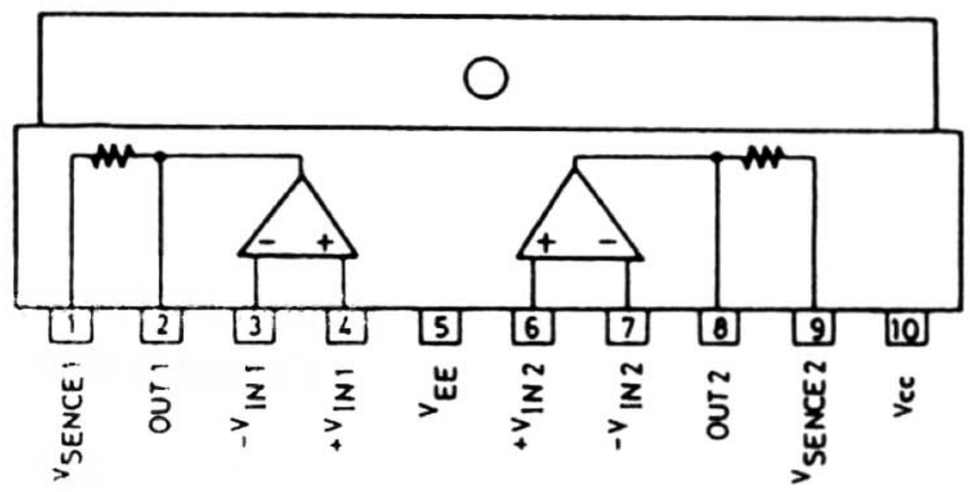

8-BT-108GK (FL tube)

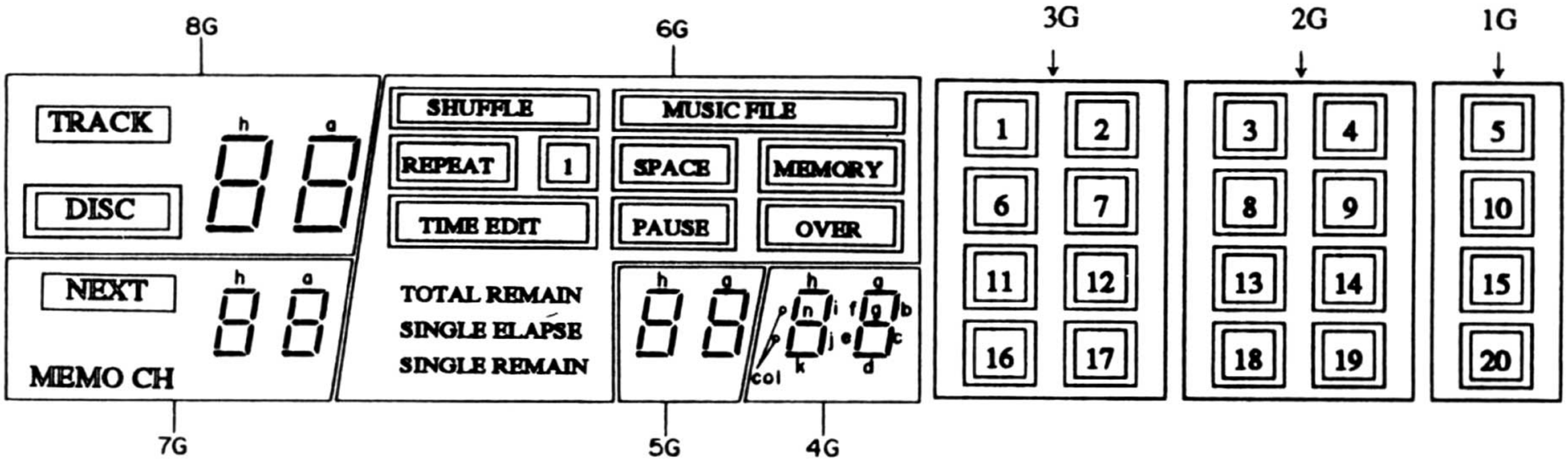

Pin No.	1	2	3	4	5	6	7	8	9	10	11	12	13	14	15	16	17	18	19	20
Connection	F1	F1	NP	8G	7G	6G	5G	4G	3G	2G	1G	NC	P16	P8	P9	NP	NP	NP	NP	NP
Pin No.	21	22	23	24	25	26	27	28	29	30	31	32	33	34	35	36	37	38	39	
Connection	NP	NP	NP	P13	P14	P10	P12	P11	P15	P4	P5	P3	P7	P6	P2	P1	NP	F2	F2	

NOTE: F1,F2---Filament,NP---No pin,NC---No connection,1G-8G---Grid,P1-P16---Segment

	8G	7G	6G	5G	4G	3G	2G	1G
P1	a	a	REPEAT	a	a	1	3	5
P2	b	b	TIME EDIT	b	b	☐ <1>	☐ <3>	☐ <5>
P3	c	c		c	c	6	8	10
P4	d	d		d	d	7	9	
P5	e	e	1	e	e	☐ <6>	☐ <8>	☐ <10>
P6	f	f	MUSIC FILE	f	f	2	4	
P7	g	g	SPACER	g	g	☐ <2>	☐ <4>	
P8	h	h	PAUSE	h	h	☐ <7>	☐ <9>	
P9	i	i	MEMORY	i	i	11	13	15
P10	j	j	SHUFFLE	j	j	☐ <12>	☐ <14>	
P11	k	k	OVER	k	k	☐ <16>	☐ <18>	☐ <20>
P12	l	l	SINGLE REMAIN	l	l	16	18	20
P13	m	m	SINGLE ELAPSE	m	m	☐ <11>	☐ <13>	☐ <15>
P14	n	n		n	n	12	14	
P15	TRACK	NEXT	TOTAL REMAIN		:	17	19	
P16	DISC	MEMO CH				☐ <17>	☐ <19>	

www.hifiengine.com

ADJUSTMENT PROCEDURES

Instruments required

Dual trace oscilloscope, Frequency counter, AF oscillator, Test disc (SONY YEDS-18), AC voltmeter, Jitter meter, and Socket P4(Part no. 25050138)

1. Focus offset adjustment

Load the test disc YEDS-18 on the tray and play the track 2.
Connect the oscilloscope or jitter meter to terminal P106.
(Oscilloscope)
Adjust R109 until a clear trace of waveform pattern as shown photo 1 appear on the oscilloscope.
When the amount of jitter is broad, set R109 to mechanical center.
(Jitter meter)
Adjust R109 until the jitter meter reading becomes minimum.(Less than 10ns.)
After adjustment, disconnect the oscilloscope or jittter meter.

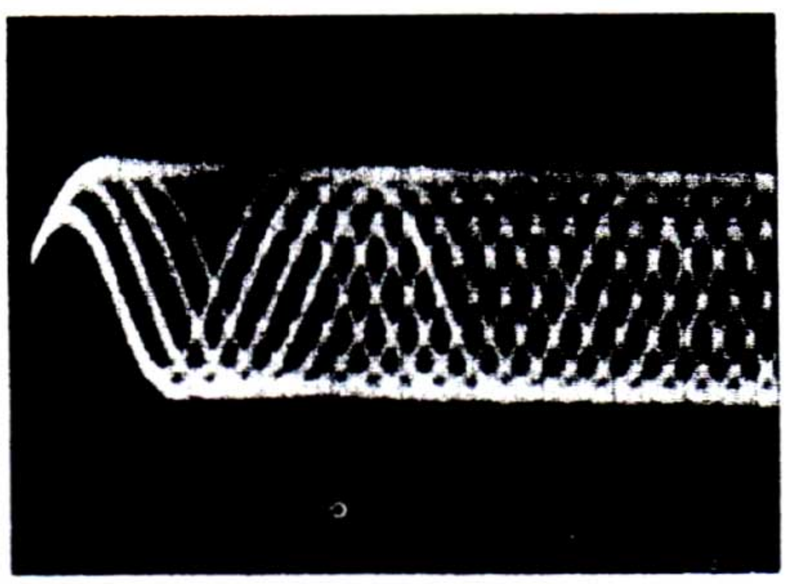

Photo 1

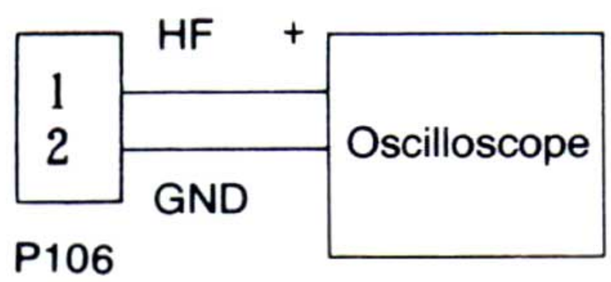

Oscilloscope range
Vertical : 0.5V/div.
Holizontal : 0.2 μs/div.
DC, Ground: Center

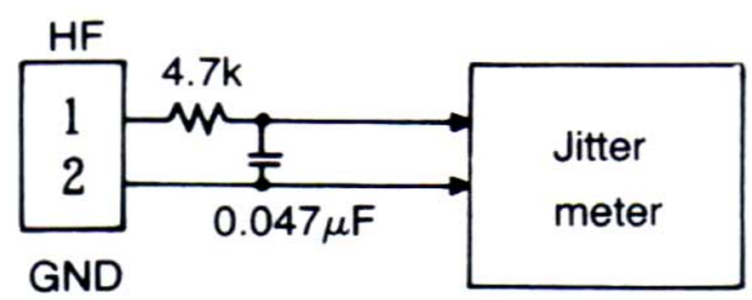

2. Tracking offset adjustment

Load the test disc YEDS-18 on the tray and play the track 2.
Turn R116 to minimum position.(Counter clockwise)
Connect the oscilloscope between pin 3 (TR) of P107 and pin 2 (GND) of P106.
Adjust R108 until the center of tracking error signal on the oscilloscope becomes GND level.
Turn R116 to the mechanical center.
After adjustment, disconnect the oscilloscope.

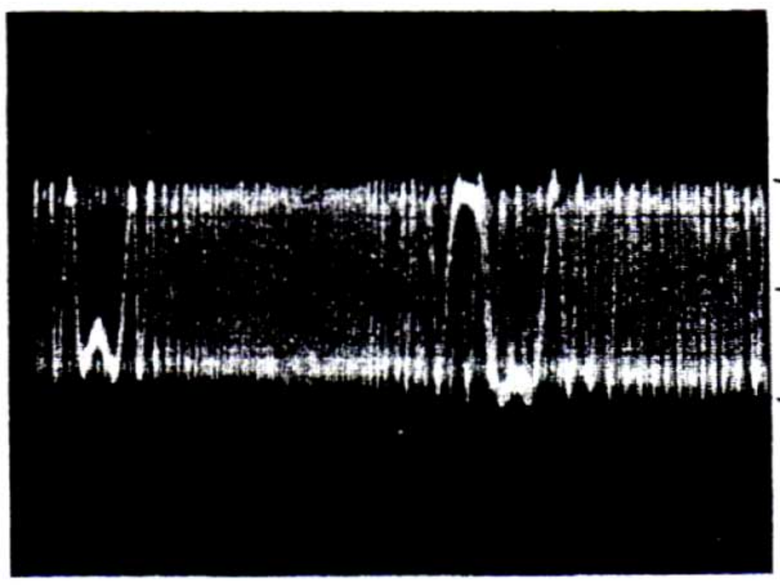

Photo 2

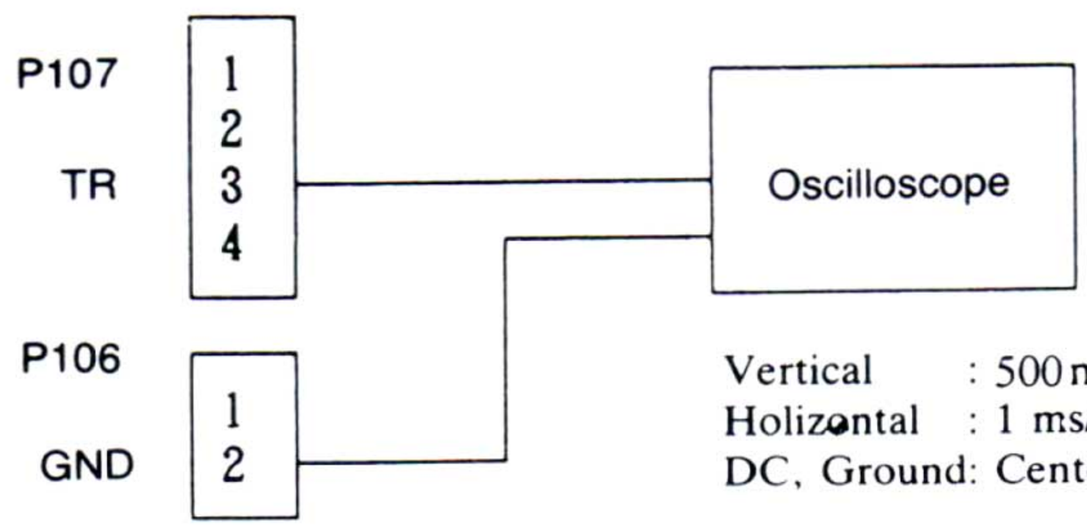

Vertical : 500mV/div.
Holizontal : 1 ms/div.
DC, Ground: Center

www.hifiengine.com

3. Focus gain adjustment

Set the output of AF oscillator to 1kHz, 1~1.5Vp-p.
Play the track 2 of test disc.
Connect the oscilloscope and the AF oscillator as shown below.

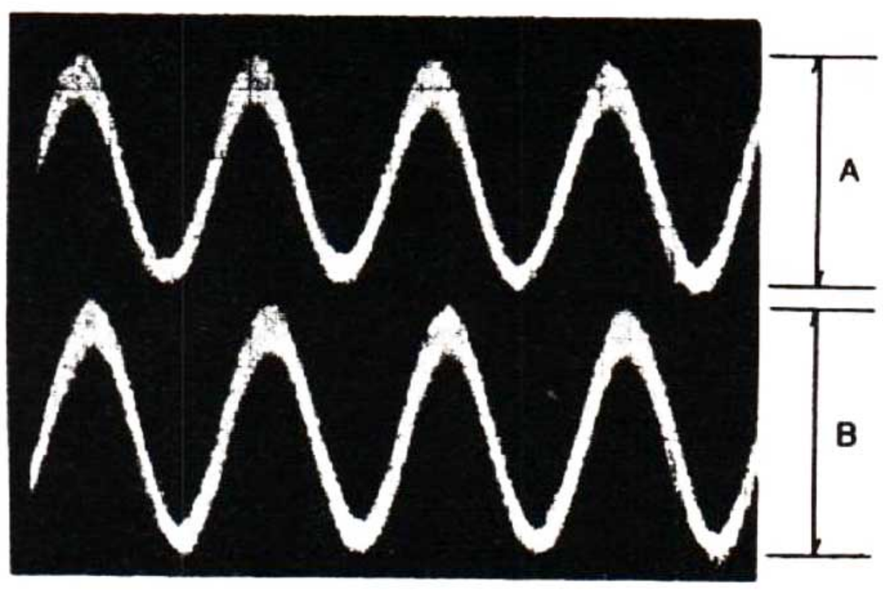

Photo 3

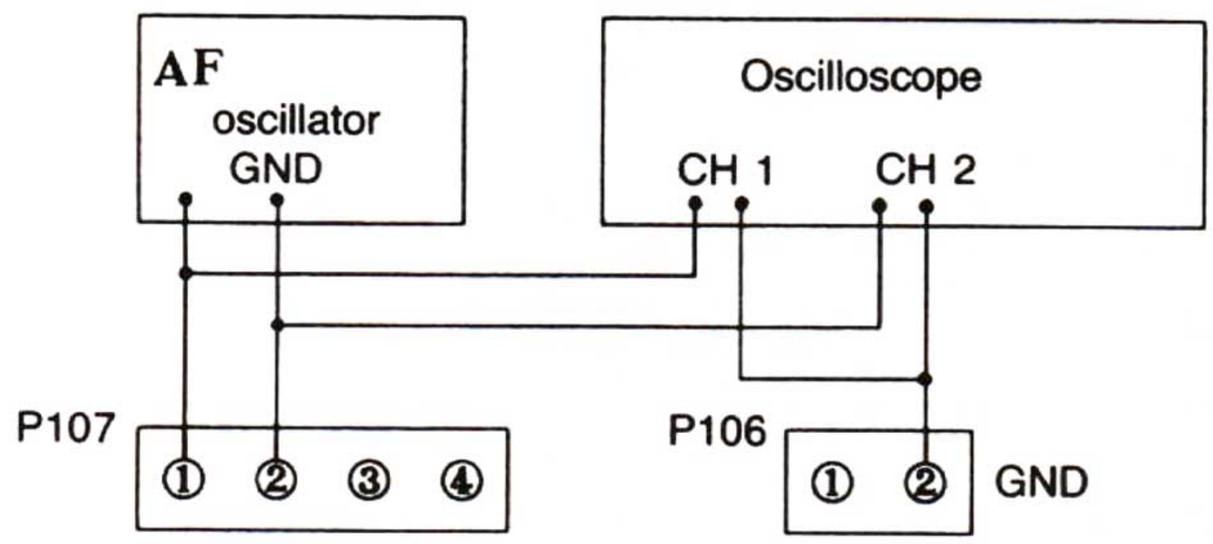

Vertical : 0.2V/div.
Holizontal: 0.5 ms/div.

Adjust R117 until 1kHz components of channels 1 and 2 on oscilloscope become same level.
After adjustment, disconnect the AF oscillator and the oscilloscope.

4. Tracking gain adjustment

Set the output of AF oscillator to 1.2kHz, 1~1.5Vp-p.
Play the track 2 of test disc.
Connect the oscilloscope and the AF oscillator as shown below.

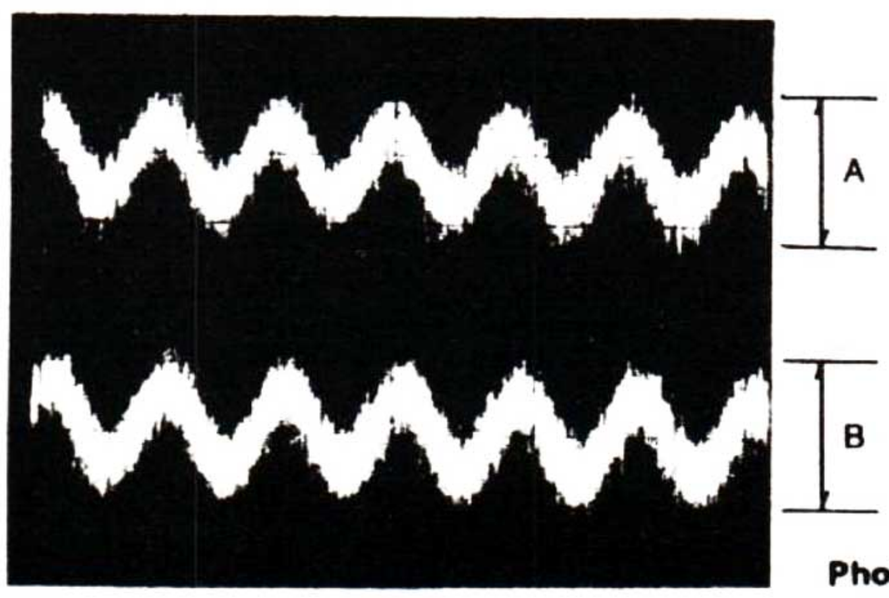

Photo 4

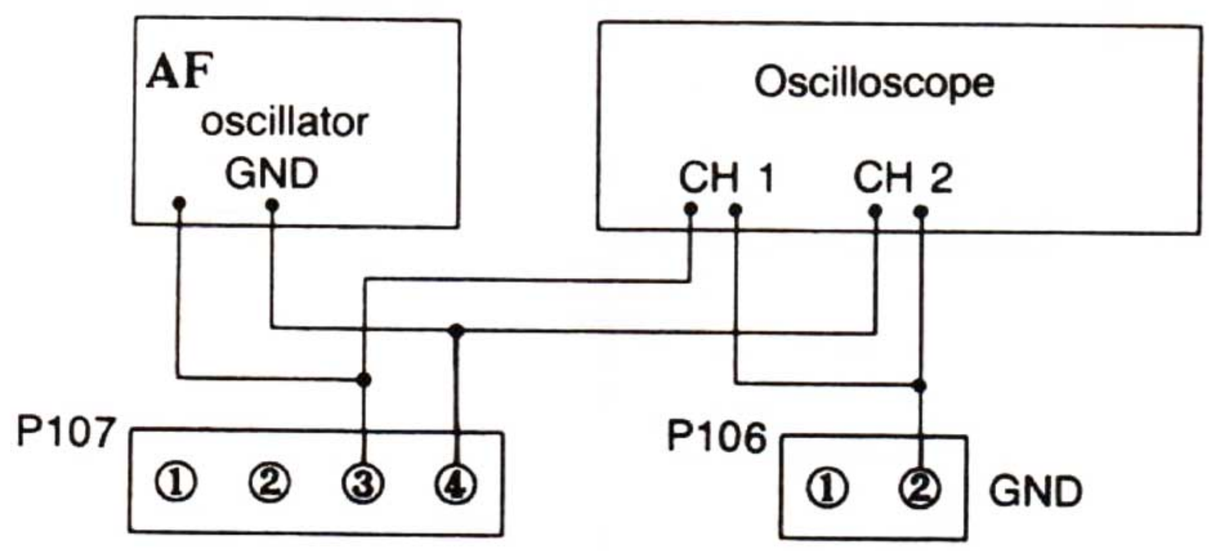

Vertical : 0.2V/div.
Holizontal: 0.5 ms/div.

Adjust R116 until 1.2kHz components of channels 1 and 2 on oscilloscope become same level.
After adjustment, disconnect the AF oscillator and the oscilloscope.

After adjustment, confirm that the center of tracking error signal becomes GND level.

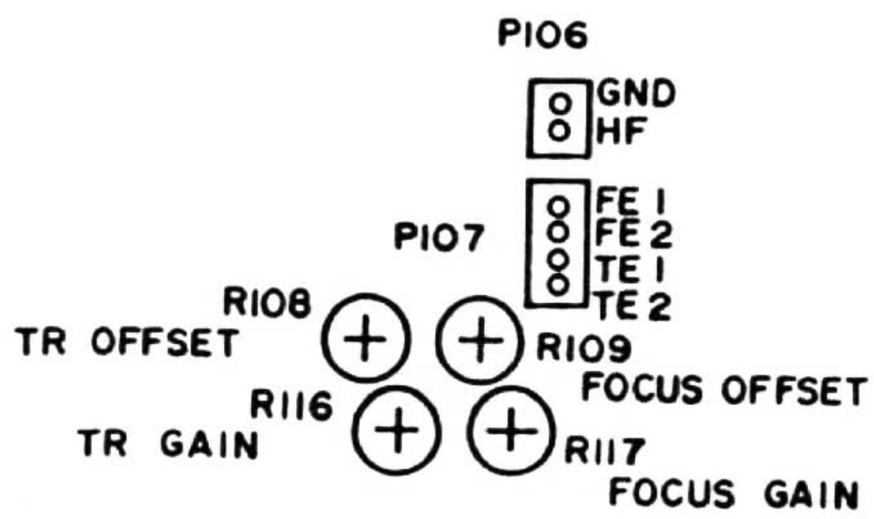
P106
GND
HF
P107
FE 1
FE 2
TE 1
TE 2
R108
TR OFFSET
R109
FOCUS OFFSET
R116
TR GAIN
R117
FOCUS GAIN

PRINTED CIRCUIT BOARD VIEW FROM BOTTOM SIDE

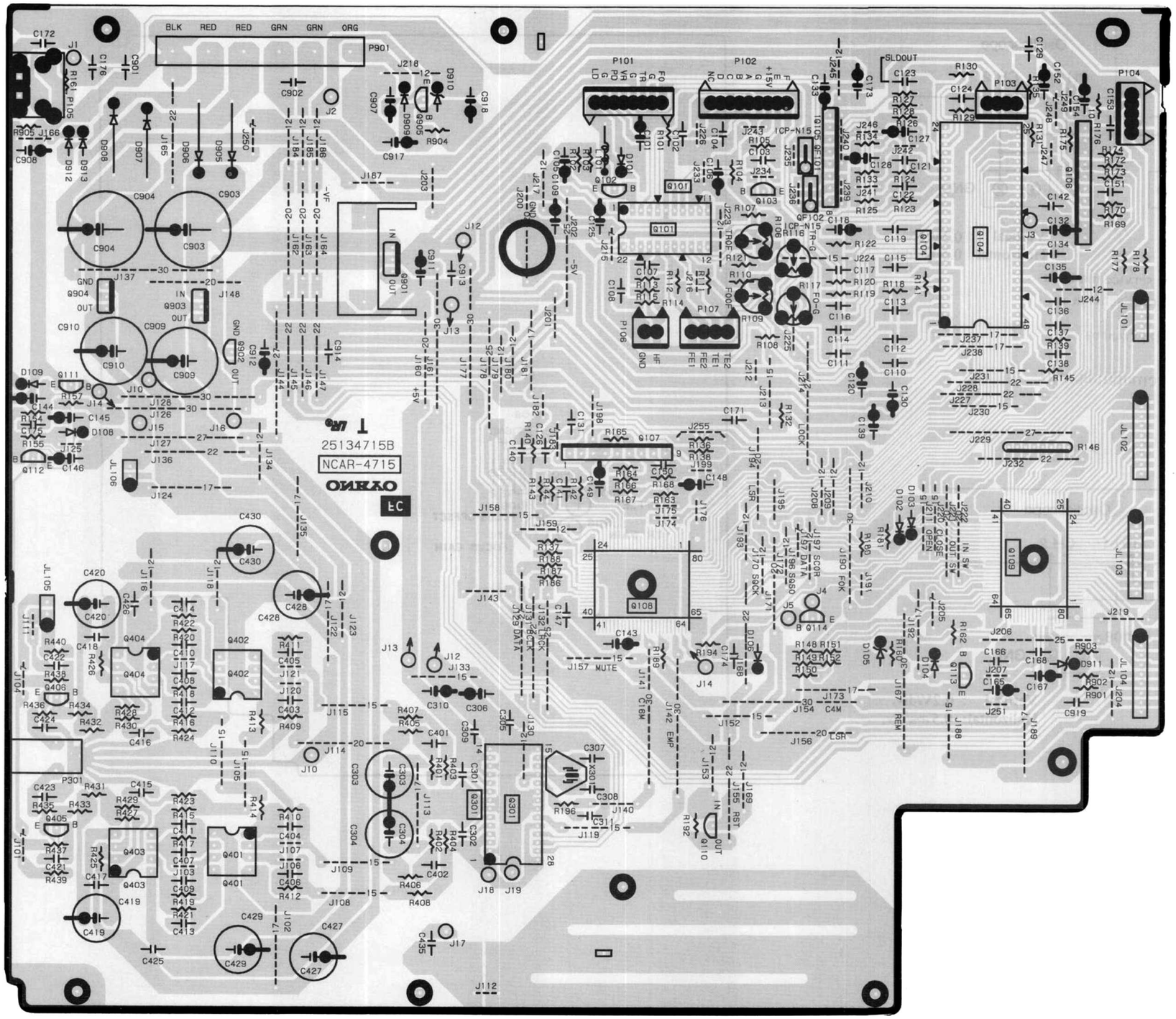

MAIN CIRCUIT PC BOARD

PARTS LIST

MAIN CIRCUIT PC BOARD(NAAR-4715-1/1A)

CIRCUIT NO.	PART NO.	DESCRIPTION
	ICs	
Q101	22240404	CXA1571S
Q104	22240366	CXA1372S
Q106	22240034	LA6510
Q107	222736	NJM4558S
Q108	22240487	CXD2500AQ
Q109	22240405	CXP50112-197Q
Q110	22240018	M51943A
Q301	22240535	TC9237BN
Q401-Q404	22570	NJM4560D-X
Q901,Q903	222780055MIT	M5F78M05L
Q902	222790053	79L05
Q904	222790055MIT	M5F79M05L
	Transistors	
Q102,Q905	2211503 or	2SA950-O or
	2211504	2SA950-Y
Q103	221281	DTC114YS
Q105	22240168	STA341M-L
Q111	221281	DTC114YS
Q112	2211455	2SA1015-GR
Q113	2213090	DTA114YS
Q405,Q406	2211705 or	2SD655-E or
	2211706	2SD655-F
	IC protectors	
QF101,QF102	252112	! ICP-N15 <P>
	Diodes	
D101-D104	223163 or	1SS133 or
D106	223205	1SS270A
D105	224450562	MTZ5.6B
D108,D109	223163 or	1SS133 or
D909	223205	1SS270A
D905-D908	22380045	RL203
D910	224452704	MTZ27D
D911	224450512	MTZ5.1B
D912,D913	223163 or	1SS133 or
	223205	1SS270A
	X'tal	
X301	3010159	AT-38-169
	Coil	
L101	233411K100	NCH-1383

<P>:Except 120V model

SCHEMATIC DIAGRAM

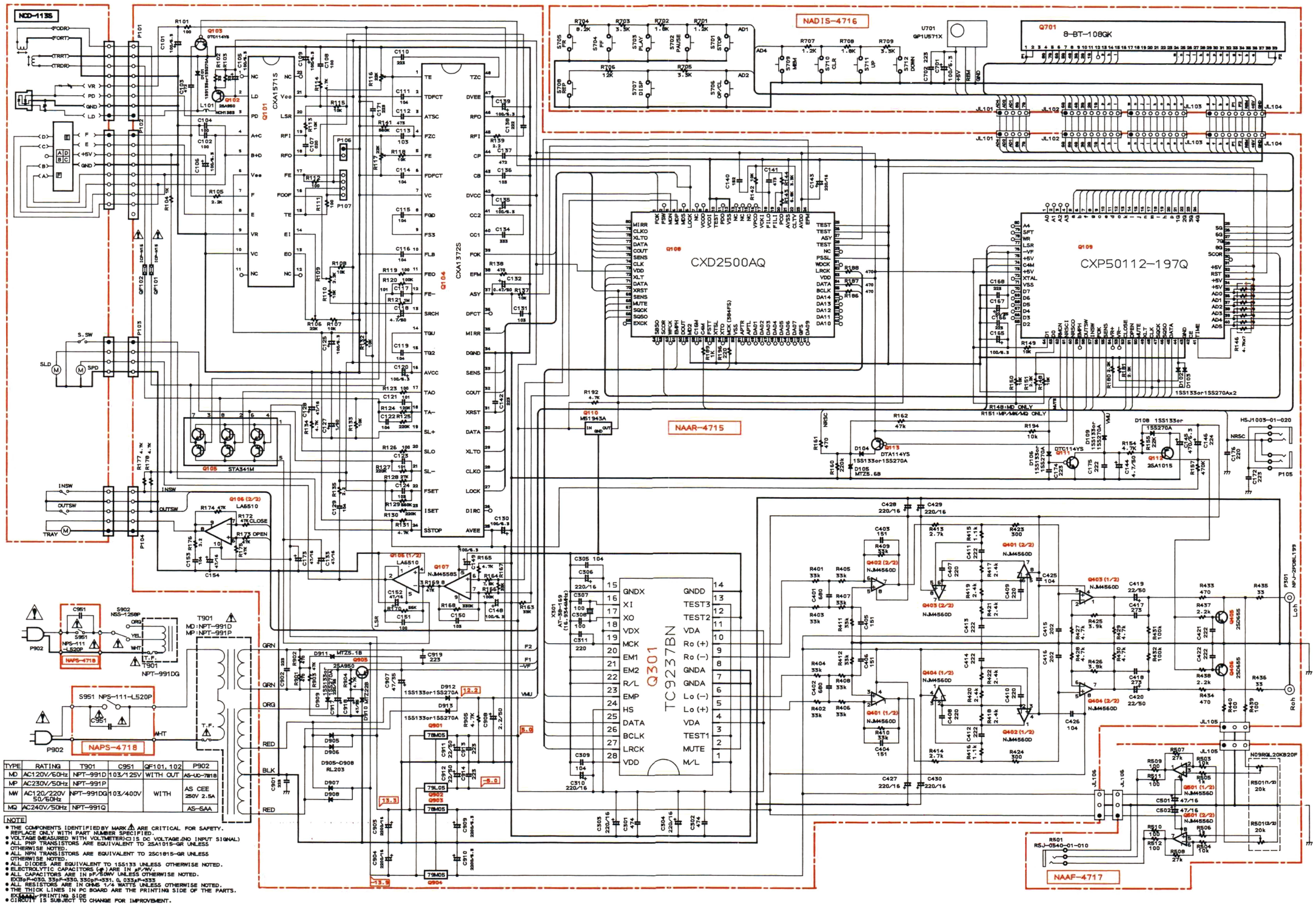

TYPE	RATING	T901	C951	QF101, 102	P902
MD	AC120V/60Hz	NPT-991D	103/125V	WITH OUT	AS-UC-7818
MP	AC230V/50Hz	NPT-991P			
MW	AC120/220V 50/60Hz	NPT-991DG	103/400V	WITH	AS CEE 250V 2.5A
MQ	AC240V/50Hz	NPT-991Q			AS-SAA

NOTE

- THE COMPONENTS IDENTIFIED BY MARK ⚠ ARE CRITICAL FOR SAFETY. REPLACE ONLY WITH PART NUMBER SPECIFIED.
- VOLTAGE (MEASURED WITH VOLTMETER) ◁ IS DC VOLTAGE (NO INPUT SIGNAL)
- ALL PNP TRANSISTORS ARE EQUIVALENT TO 2SA1015-GR UNLESS OTHERWISE NOTED.
- ALL NPN TRANSISTORS ARE EQUIVALENT TO 2SC1815-GR UNLESS OTHERWISE NOTED.
- ALL DIODES ARE EQUIVALENT TO 1SS133 UNLESS OTHERWISE NOTED.
- ELECTROLYTIC CAPACITORS (μF) ARE IN μF/WV.
- ALL CAPACITORS ARE IN pF/50WV UNLESS OTHERWISE NOTED. EX)3pF=030, 33pF=330, 330pF=331, 0.033μF=333
- ALL RESISTORS ARE IN OHMS, 1/4 WATTS UNLESS OTHERWISE NOTED.
- THE THICK LINES IN PC BOARD ARE THE PRINTING SIDE OF THE PARTS. EX) PRINTING SIDE
- CIRCUIT IS SUBJECT TO CHANGE FOR IMPROVEMENT.

ONKYO CORPORATION

PRINTED CIRCUIT BOARD VIEW FROM BOTTOM SIDE

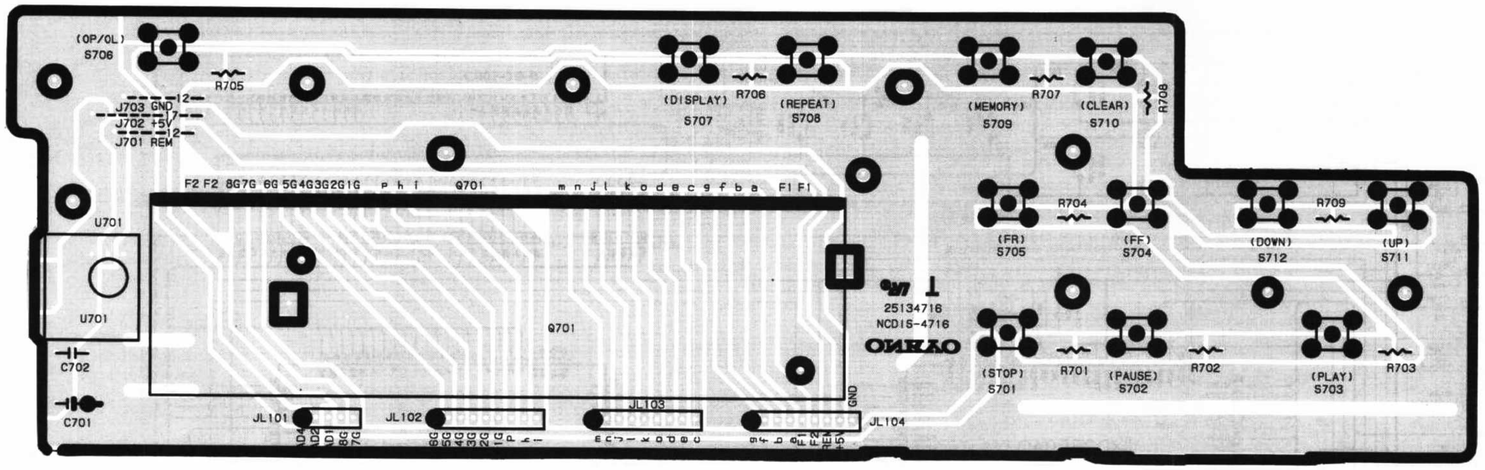

DISPLAY CIRCUIT PC BOARD

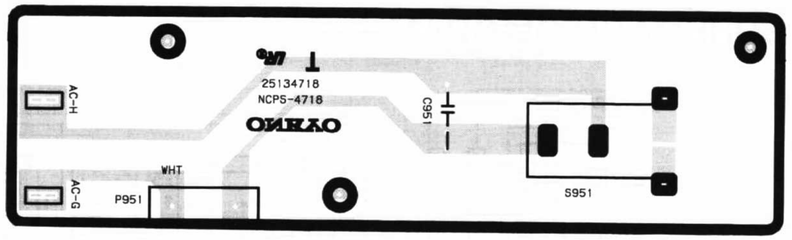

POWER SUPPLY CIRCUIT PC BOARD

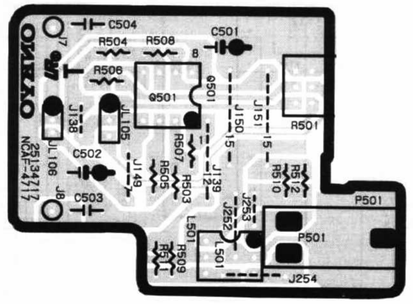

HEADPHONE AMPLIFIER PC BOARD

CIRCUIT NO.	PART NO.	DESCRIPTION
	Capacitors	
C101,C105	354721019	100 μ F,6.3V,Elect.
C103,C137	374724724	4700pF±5%,50V,Plastic
C106,C109	354721019	100 μ F,6.3V,Elect.
C110	374722234	0.022 μ F±5%,50V,Plastic
C111	374721044	0.1 μ F±5%,50V,Plastic
C112,C141	374724734	0.047 μ F±5%,50V,Plastic
C113,C124	374721034	0.01 μ F±5%,50V,Plastic
C114-C116	374721044	0.1 μ F±5%,50V,Plastic
C118,C144	354780479	4.7 μ F,50V,Elect.
C119,C122	374721044	0.1 μ F±5%,50V,Plastic
C120,C125	354721019	100 μ F,6.3V,Elect.
C127	354780109	1 μ F,50V,Elect.
C128,C133	354744709	47 μ F,16V,Elect.
C129,C153	374721044	0.1 μ F±5%,50V,Plastic
C130,C135	354721019	100 μ F,6.3V,Elect.
C131,C136	374721034	0.01 μ F±5%,50V,Plastic
C132	354784799	0.47 μ F,50V,Elect.
C134	374723334	0.033 μ F±5%,50V,Plastic
C138,C175	374722224	2200pF±5%,50V,Plastic
C139	354721019	100 μ F,6.3V,Elect.
C140	374721524	1500pF±5%,50V,Plastic
C143	354742219	220 μ F,16V,Elect.
C145	354724719	470 μ F,6.3V,Elect.
C146	374722244	0.22 μ F±5%,50V,Plastic
C148,C149	354721019	100 μ F,6.3V,Elect.
C150	374721034	0.01 μ F±5%,50V,Plastic

CIRCUIT NO.	PART NO.	DESCRIPTION
	Capacitors	
C152,C154	354744709	47 μ F,16V,Elect.
C165	354721019	100 μ F,6.3V,Elect.
C167	354762209	22 μ F,35V,Elect.
C173	354744709	47 μ F,16V,Elect.
C301,C302	374724744	0.47 μ F±5%,50V,Plastic
C303,C304	354742219	220 μ F,16V,Elect.
C305	374721044	0.1 μ F±5%,50V,Plastic
C306	354742219	220 μ F,16V,Elect.
C309	374721044	0.1 μ F±5%,50V,Plastic
C310	354742219	220 μ F,16V,Elect.
C403-C406	373301514	150pF±5%,125V,PP
C411-C414	374722224	2200pF±5%,50V,Plastic
C415,C416	374722024	2000pF±5%,50V,Plastic
C417,C418	374722734	0.027 μ F±5%,50V,Plastic
C419,C420	354782209	22 μ F,50V,Elect.
C421,C422	374722224	2200pF±5%,50V,Plastic
C425,C426	374721044	0.1 μ F±5%,50V,Plastic
C427-C430	354742219	220 μ F,16V,Elect.
C903,C904	354742229	2200 μ F,16V,Elect.
C907,C918	354764709	47 μ F,35V,Elect.
C908	354780229	2.2 μ F,50V,Elect.
C909,C910	354722229	2200 μ F,6.3V,Elect.
C911,C912	354782209	22 μ F,50V,Elect.
C917	354762219	220 μ F,35V,Elect.

CIRCUIT NO.	PART NO.	DESCRIPTION
	Resistors	
R106	5210066	N06HR22KBD,Semi-fixed
R109	5210060	N06HR2.2KBD,Semi-fixed
R116,R117	5210066	N06HR22KBD,Semi-fixed
R146	49163472407	RM1/101J 4.7K×7,Array
	Plugs	
P101	25055152	NPLG-8P136
P102	25055153	NPLG-9P137
P103	25055148	NPLG-4P132
P104	25055149	NPLG-5P133
P106	25055038	NPLG-2P29
P107	25055045	NPLG-4P33
	Jack	
P105	25045172	HSJ1003-01-020
	Terminal	
P301	25045353	NPJ-2PDBL199,Output
	Holder	
	27190751	

NOTE: THE COMPONENTS IDENTIFIED BY MARK ⚠ ARE CRITICAL FOR RISK OF FIRE AND ELECTRIC SHOCK. REPLACE ONLY WITH PART NUMBER SPECIFIED.

DISPLAY CIRCUIT PC BOARD(NADIS-4716-1)

CIRCUIT NO.	PART NO.	DESCRIPTION
	Remote control sensor	
U701	24130007	GP1U571X
	Push switches	
S701-S712	25035548	NPS-111-S510
	FL tube	
Q701	212092	8-BT-108GK
	Holder	
	27190754Y	FL
	Capacitor	
C701	353721019	100 μ F,6.3V,Elect.

HEADPHONE AMPLIFIER PC BOARD(NAAF-4717-1)

CIRCUIT NO.	PART NO.	DESCRIPTION
Q501	222654	NJM4556D,IC
C501,C502	354744709	47 μ F,16V,Elect. capacitors
R501	5104301Y	N09RGL20KB20F, Variable resistor
P501	25045139	HSJ-0540-01-010, Headphone jack

POWER SUPPLY CIRCUIT PC BOARD(NAPS-4718-1)

CIRCUIT NO.	PART NO.		DESCRIPTION
C951	3500065A	!	DE7150FZ103PAC400V/ 125V,IS capacitor
S951	25035558	!	NPS-111-520P, Power switch

TROUBLESHOOTING GUIDE

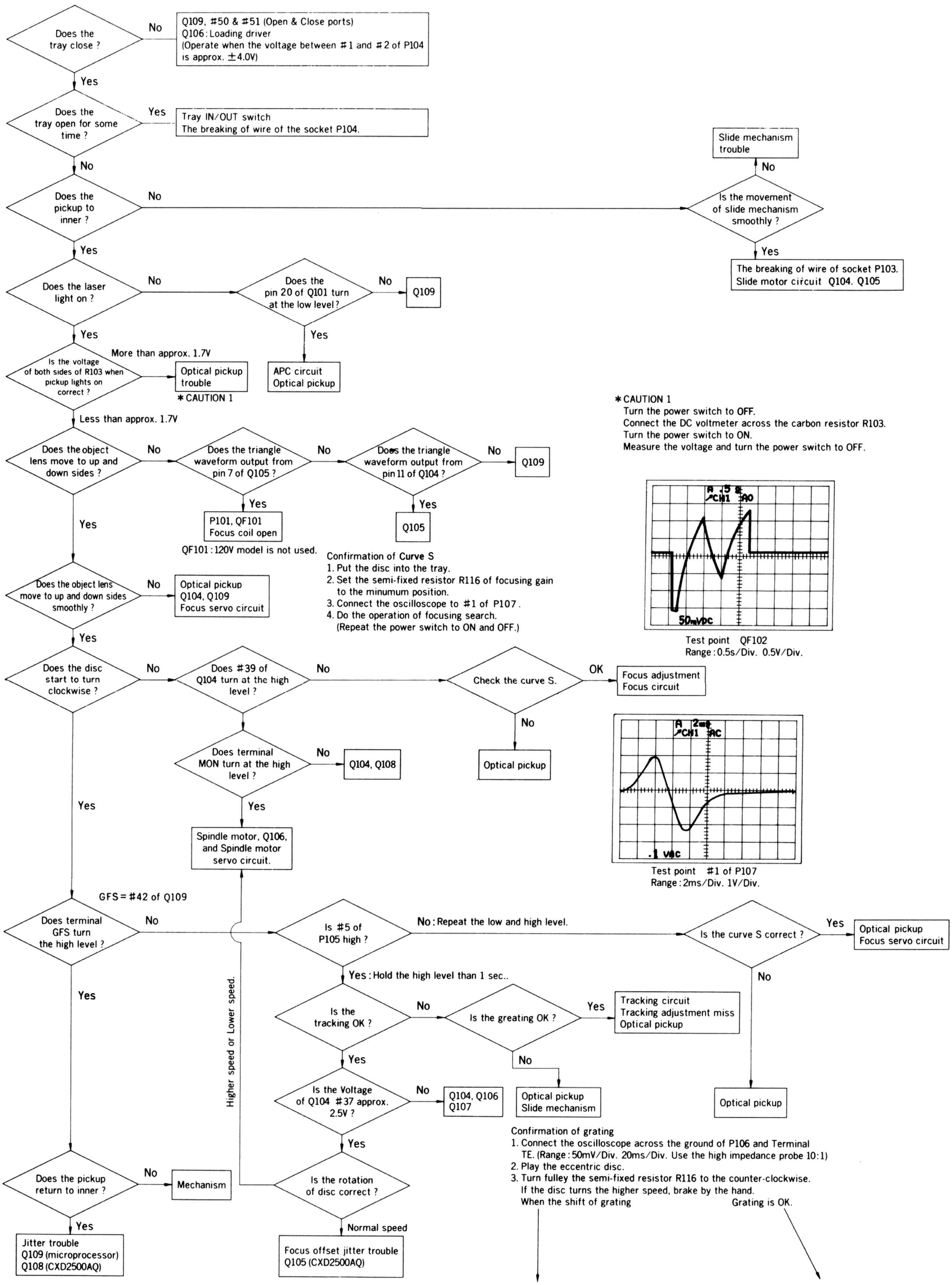

BLOCK DIAGRAM

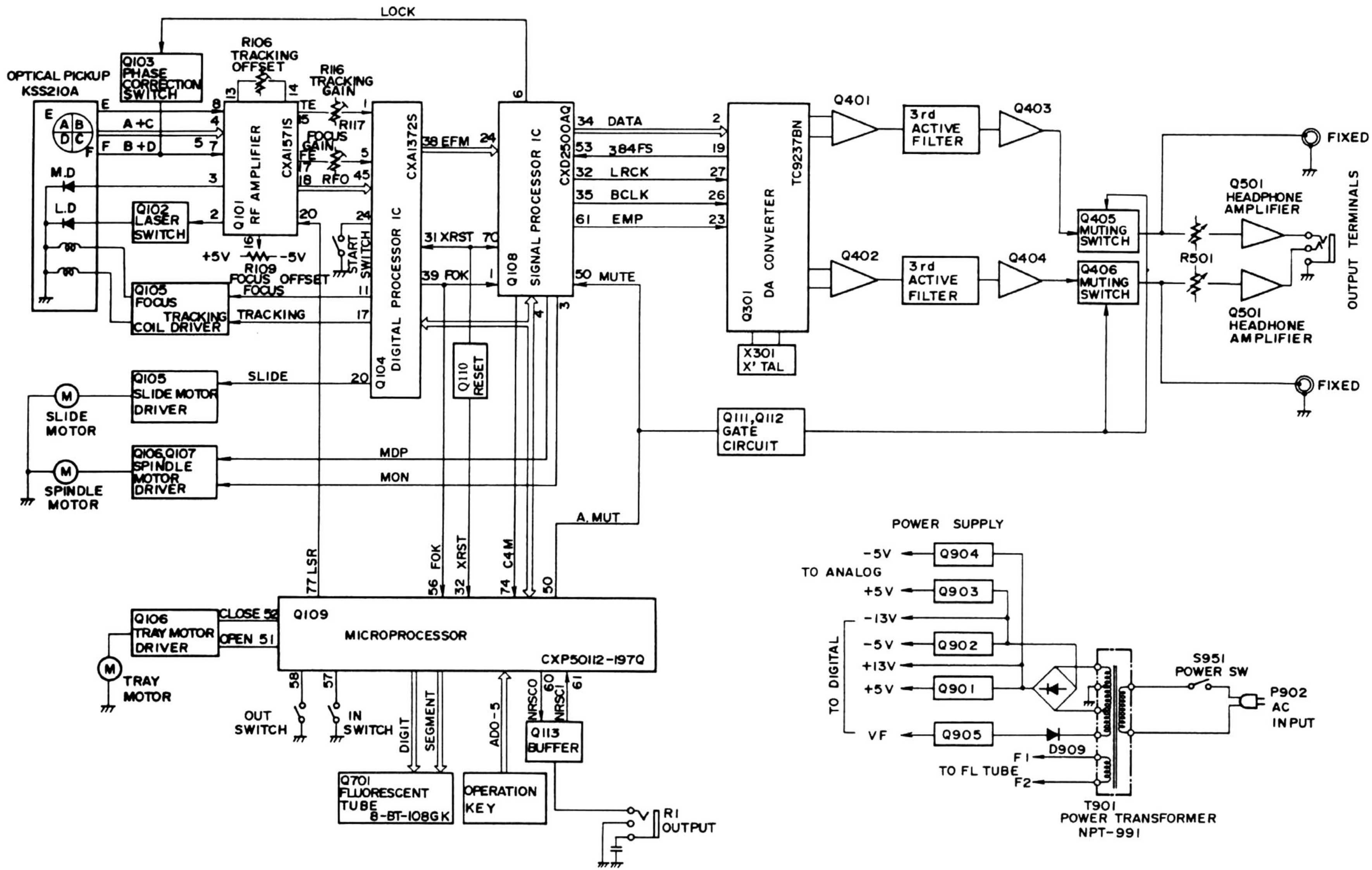

www.hifiengine.com

PACKING VIEW

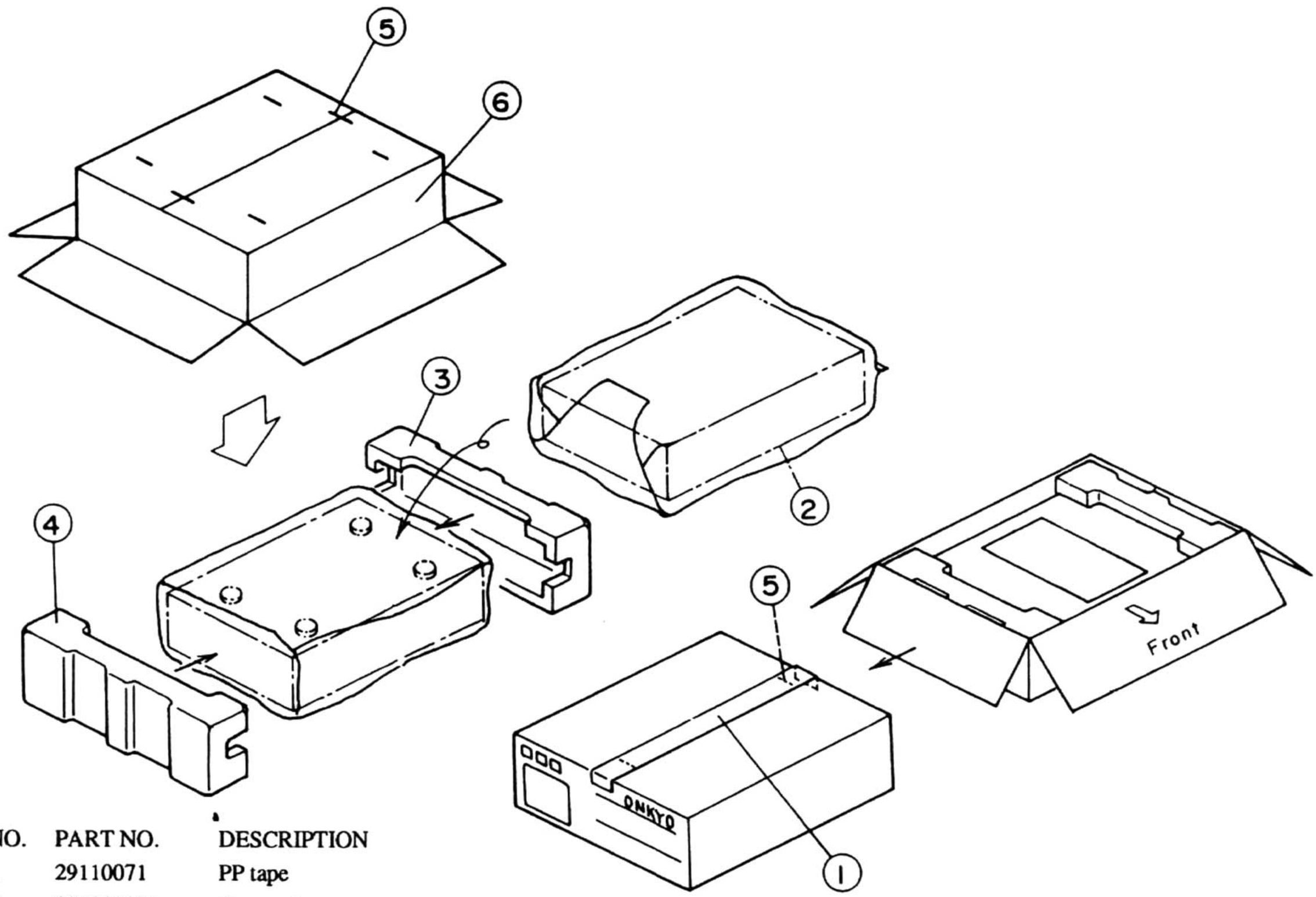

REF.NO.	PART NO.	DESCRIPTION
1	29110071	PP tape
2	29100037A	Styrene bag
3	29091434AY	Pad R
4	29091433AY	Pad L
5	282301	Staple
6	29052570Y	Master carton box <B>
	29052572Y	Master carton box <S>
	Accessary bag ass'y	
	2010098A	Connection cord
	2010200	Remote control cord
	24140196Y	RC-196C,Remote control transmitter
	3010054	UM-3,Two batteries
	29341804Y	Instruction manual <D>
	29341806Y	Instruction manual <P/W/Q/C>
	29100097	Styrene bag
	25055040	CV-K-2,Conversion plug <W>
	29365019A	Warranty card <N>
	29365024A	Warranty card <F>
	29100107	Styrene bag for warranty card <F>
	29358002J	Service station list <N>

NOTE: <B>: Black model only
<S>: Silver model only
<D>: 120 V model only
<P>: 230 V model only
<W>: Worldwide model only
<Q>: 240 V model only
<N>: U.S.A. model only
<F>: French model only
<C>: Canadian model only

ONKYO CORPORATION

International Division: 2-1, Nisshin-cho, Neyagawa-shi, OSAKA 572, JAPAN
Tel: 0720-31-8133 Fax: 0720-34-1340

ONKYO U.S.A. CORPORATION
200 Williams Drive, Ramsey, N.J. 07446, U.S.A.
Tel: 201-825-7950 Fax: 201-825-8150

ONKYO Europe GmbH
Immeuble Le DIAMANT, Domaine Technologique De Saclay, 4 rue Rene Razel,
91892 SACLAY, FRANCE Tel: (1)69 33 14 15 Fax: (1)69 41 29 66

ONKYO FRANCE S.A.R.L.
Immeuble Le DIAMANT, Domaine Technologique De Saclay 4 rue Rene Razel,
91892 SACLAY, FRANCE Tel: (1)69 41 35 10 Fax: (1)69 41 35 84

SN0M3444 N301 Printed in Japan

www.hifiengine.com