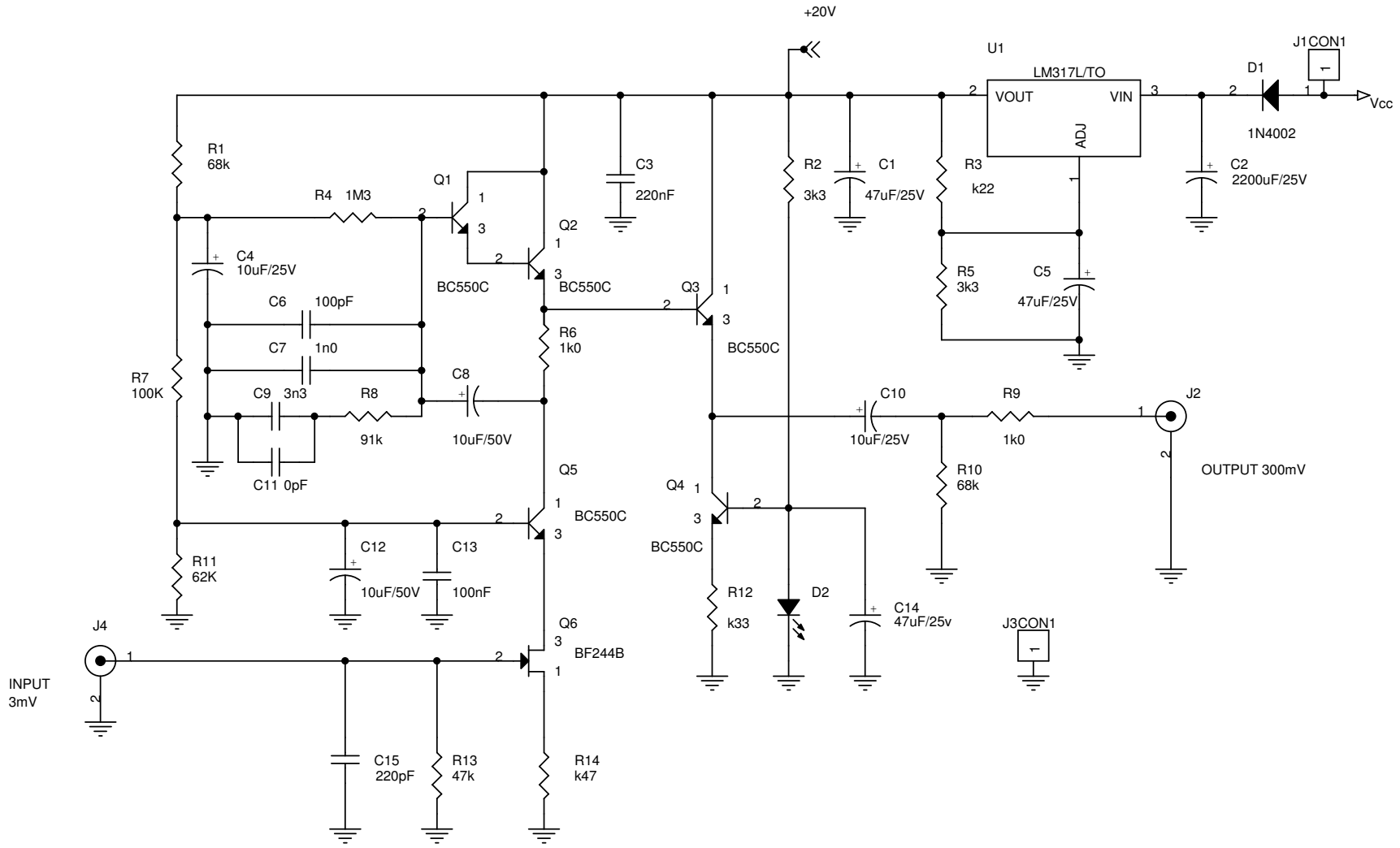

Title	**OBH-8SE**	
Size	Document Number	Rev 1
Date: Thursday, February 24, 2005	Sheet 1 of 2	

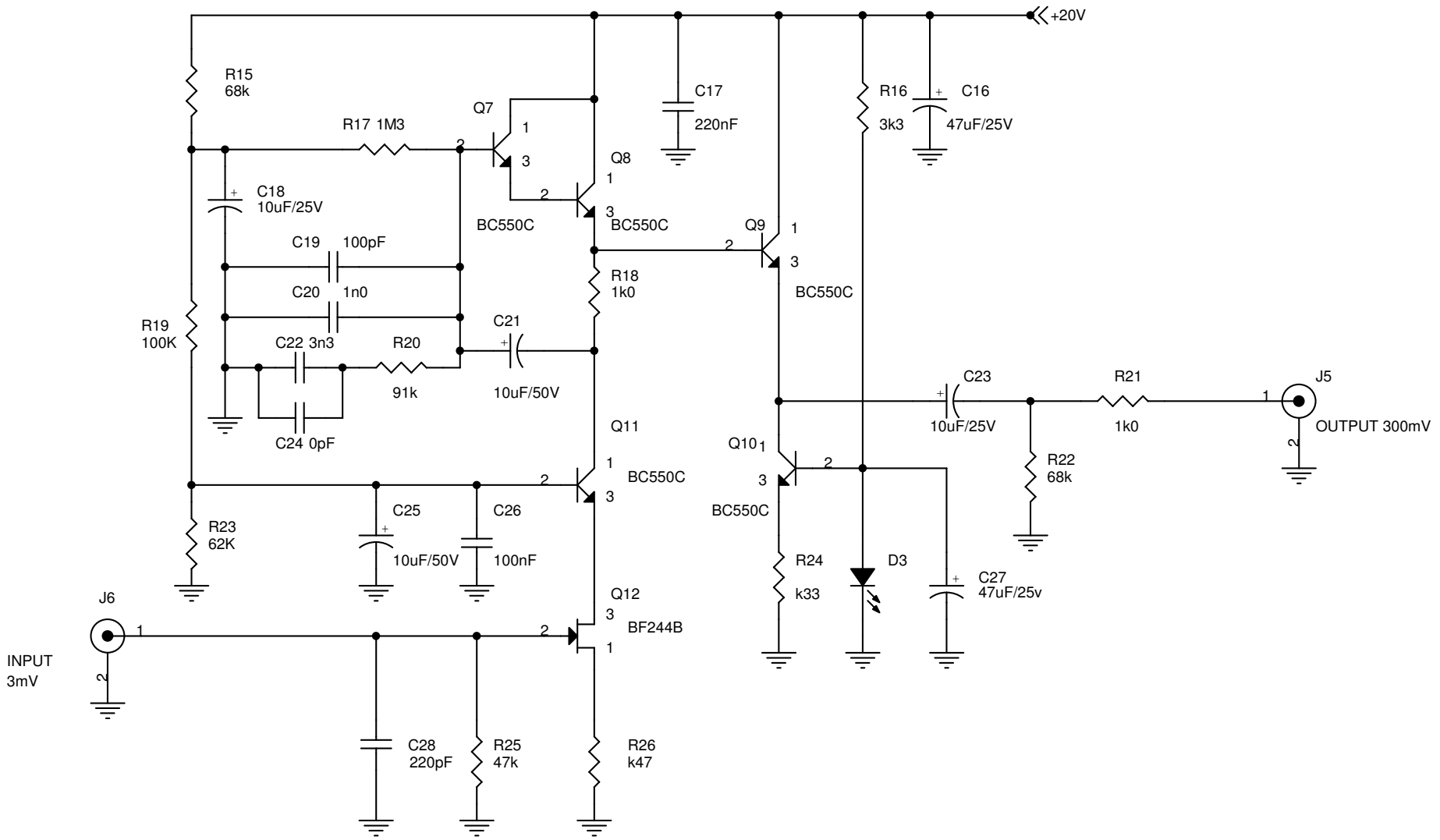

Title <Title>		
Size A	Document Number <Doc>	Rev <RevCode>
Date: Thursday, February 24, 2005	Sheet 2 of 2	