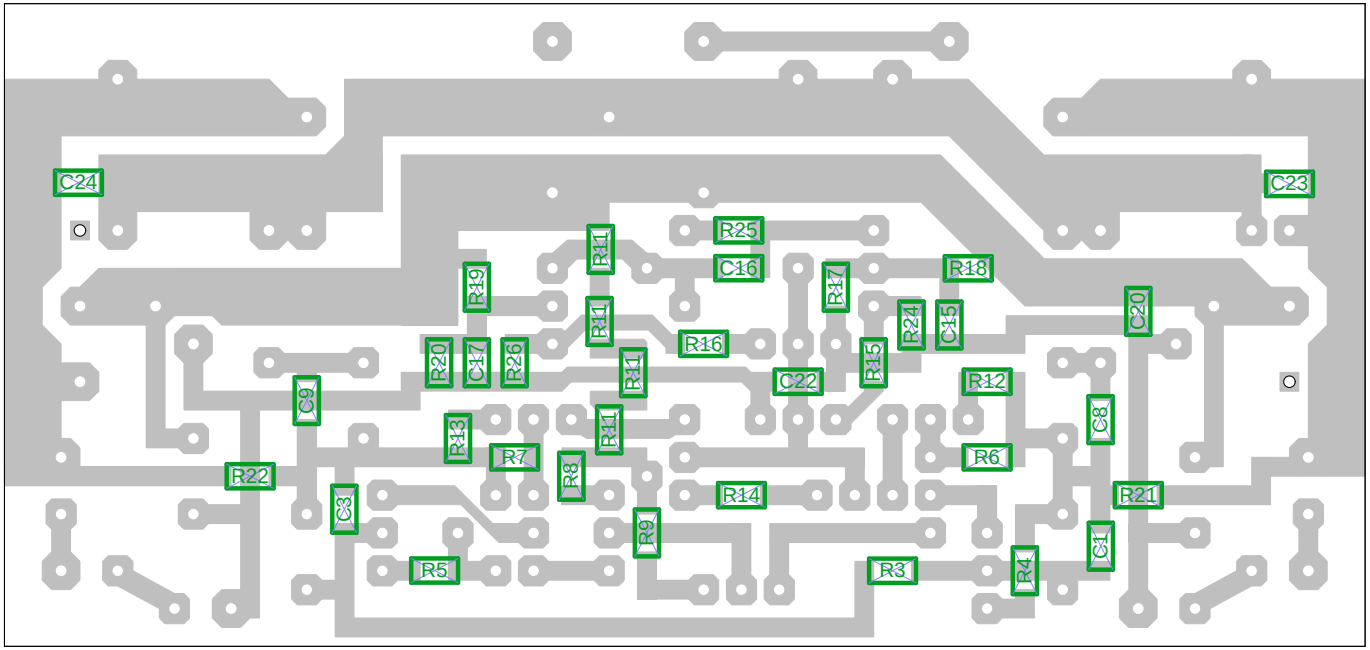
C24
C23
R25
R11
C16
R18
R19
R17
R11
R24
C15
C20
R20
C17
R26
R16
R11
R15
C22
R12
C9
R13
R11
C8
R7
R8
R6
R22
C3
R14
R21
R9
C1
R5
R3
R4

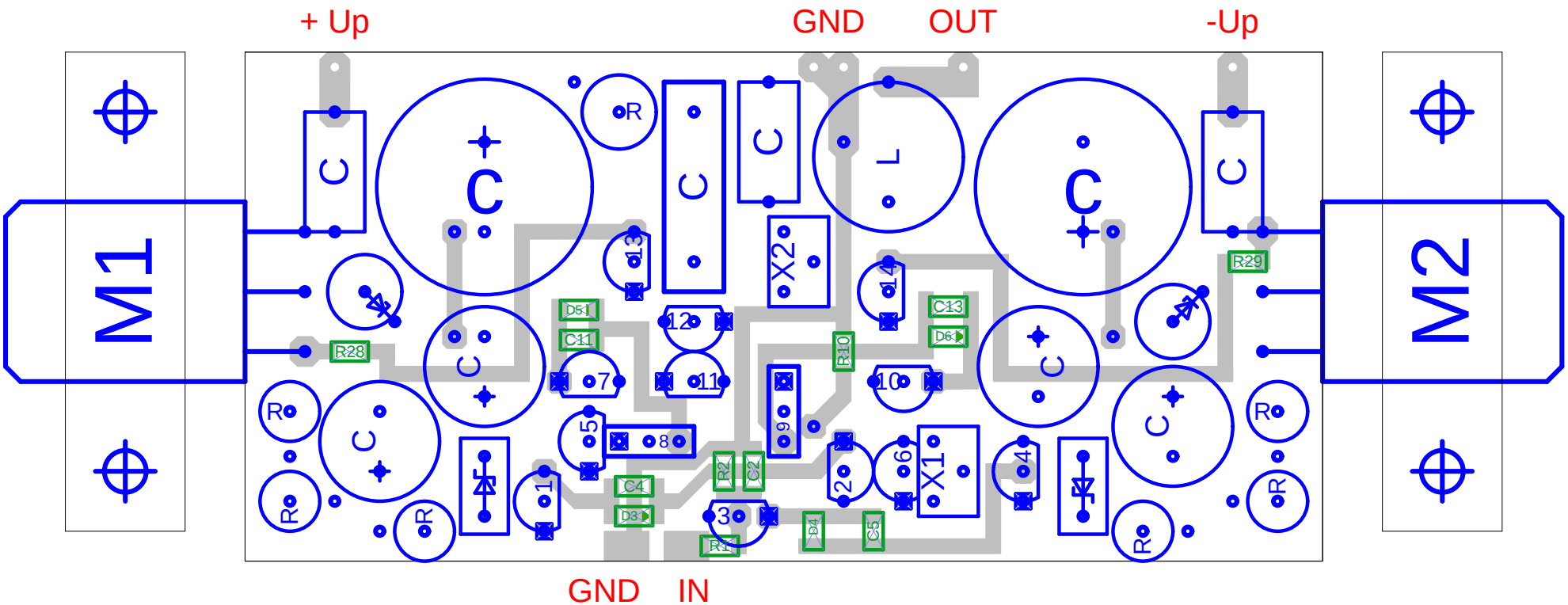
+ Up
GND
OUT
-Up
M1
M2
R28
R29
D51
C11
C13
D61
R10
X2
X1
C4
D31
R2
C2
R1
D41
C5
GND
IN