10.25 ICEPOWER AMP ASSY (2/5)

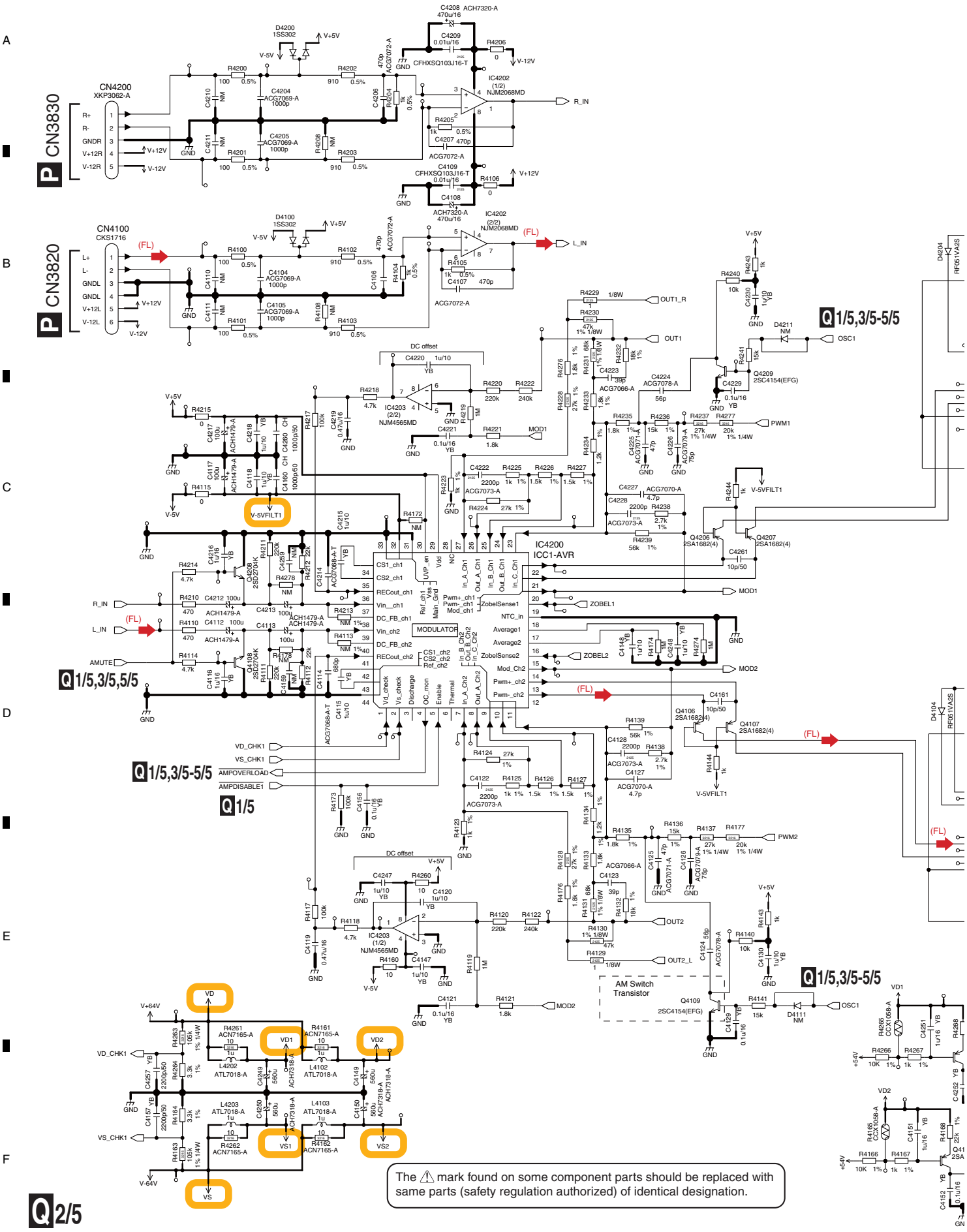

The ⚠ mark found on some component parts should be replaced with same parts (safety regulation authorized) of identical designation.

Q2/5 ICEPOWER AMP ASSY (AWH7023: SC-LX82) (AWH7020: SC-LX72)

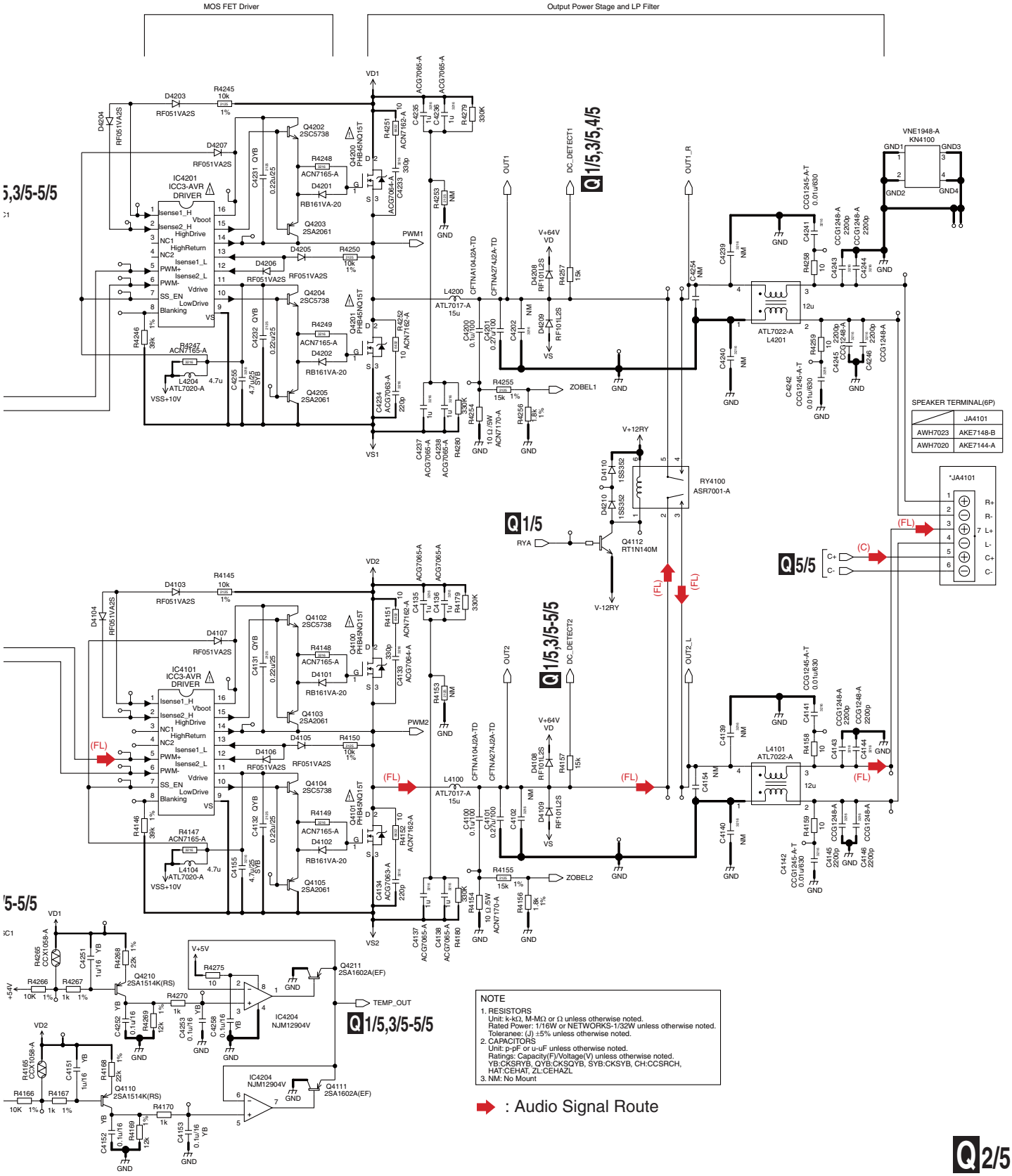

	JA4101
AWH7023	AKE7148-B
AWH7020	AKE7144-A