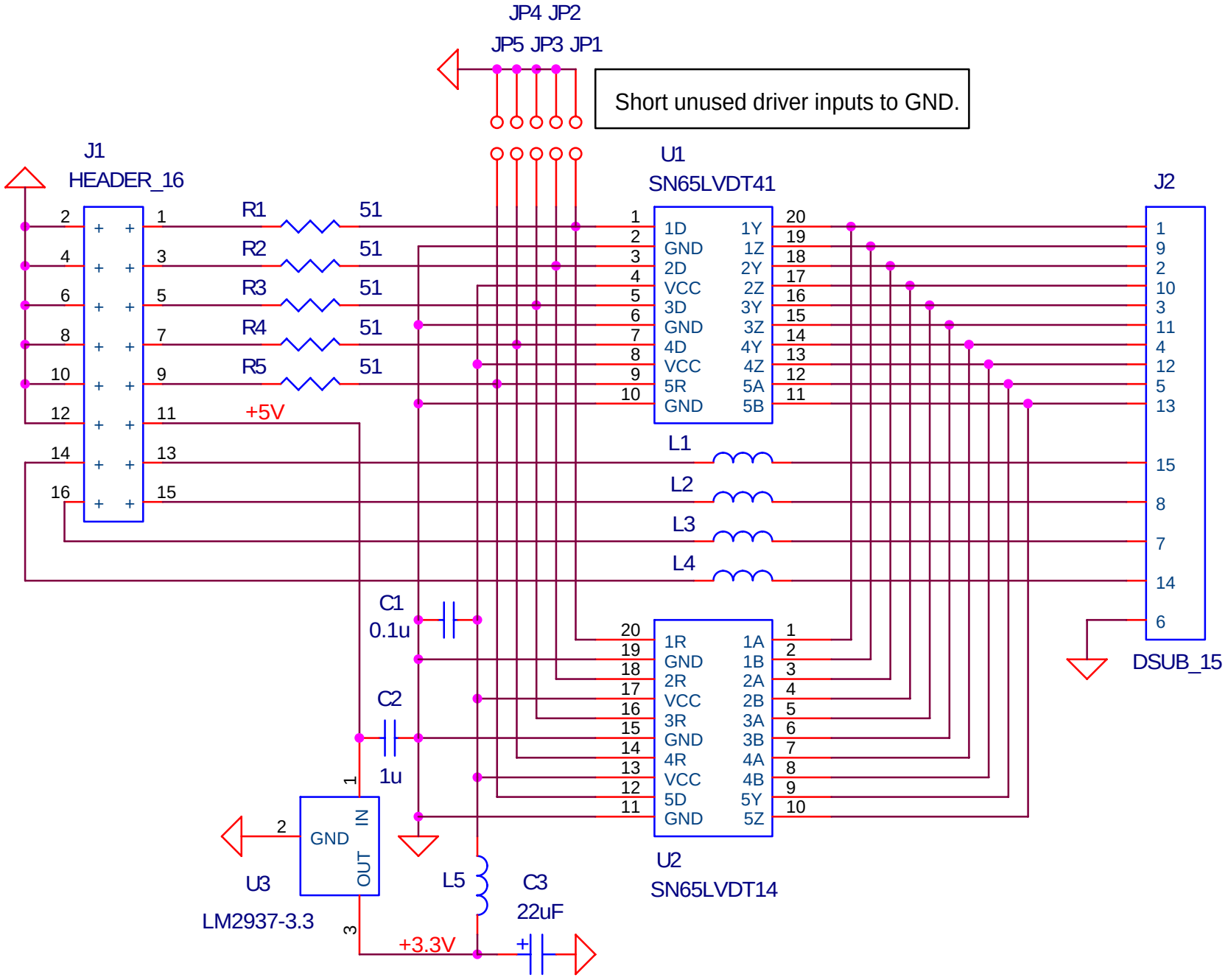

Created: July, 2007

LVDS Interface Board, all connections.

© Vitaly Ovseitsev	File LVDS.DSN	Rev 00	Size	Sheet 1 of 1