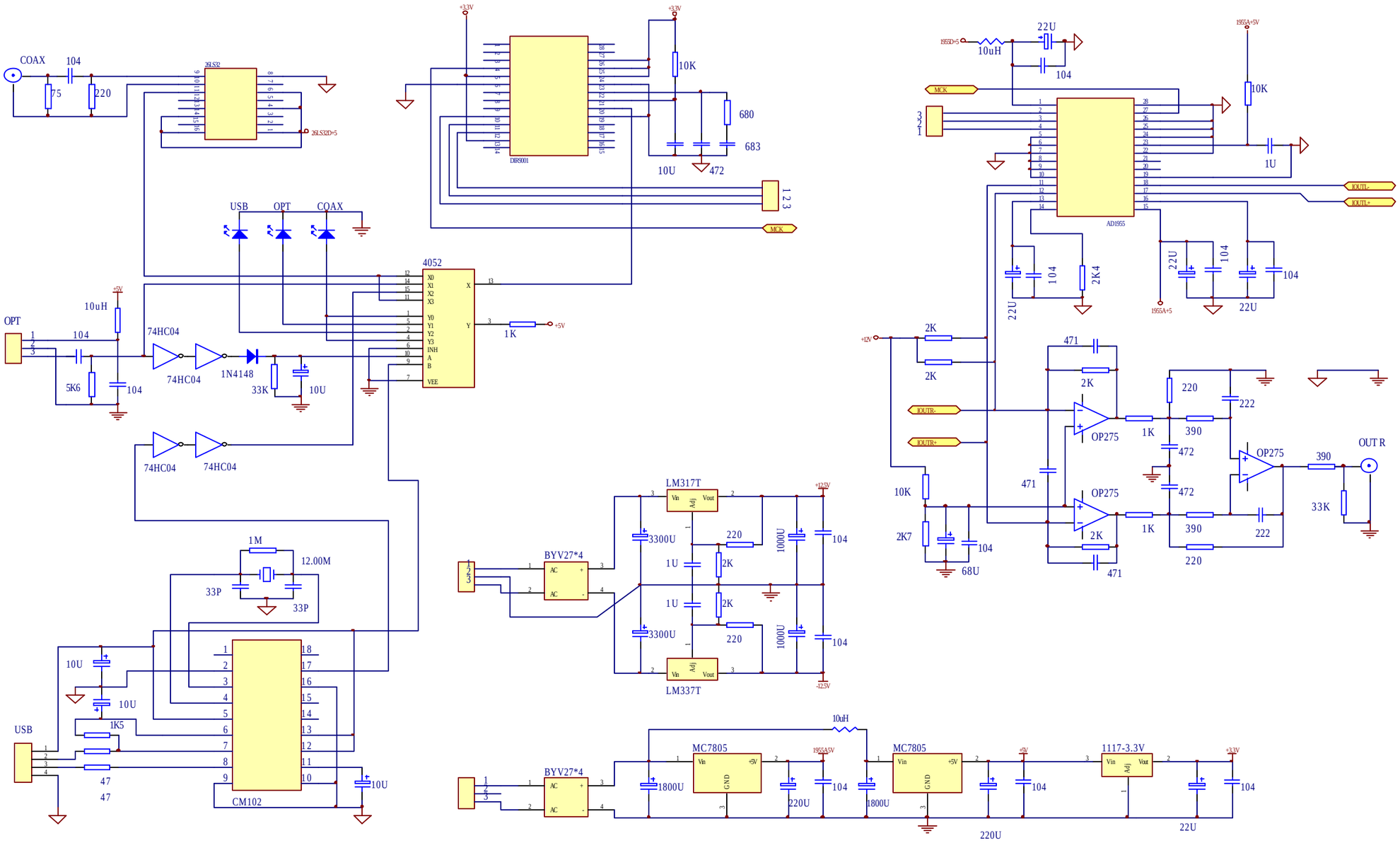

Title		
Size C	Number	Revision
Date: 13-Mar-2010		Sheet of
File:		Drawn By: