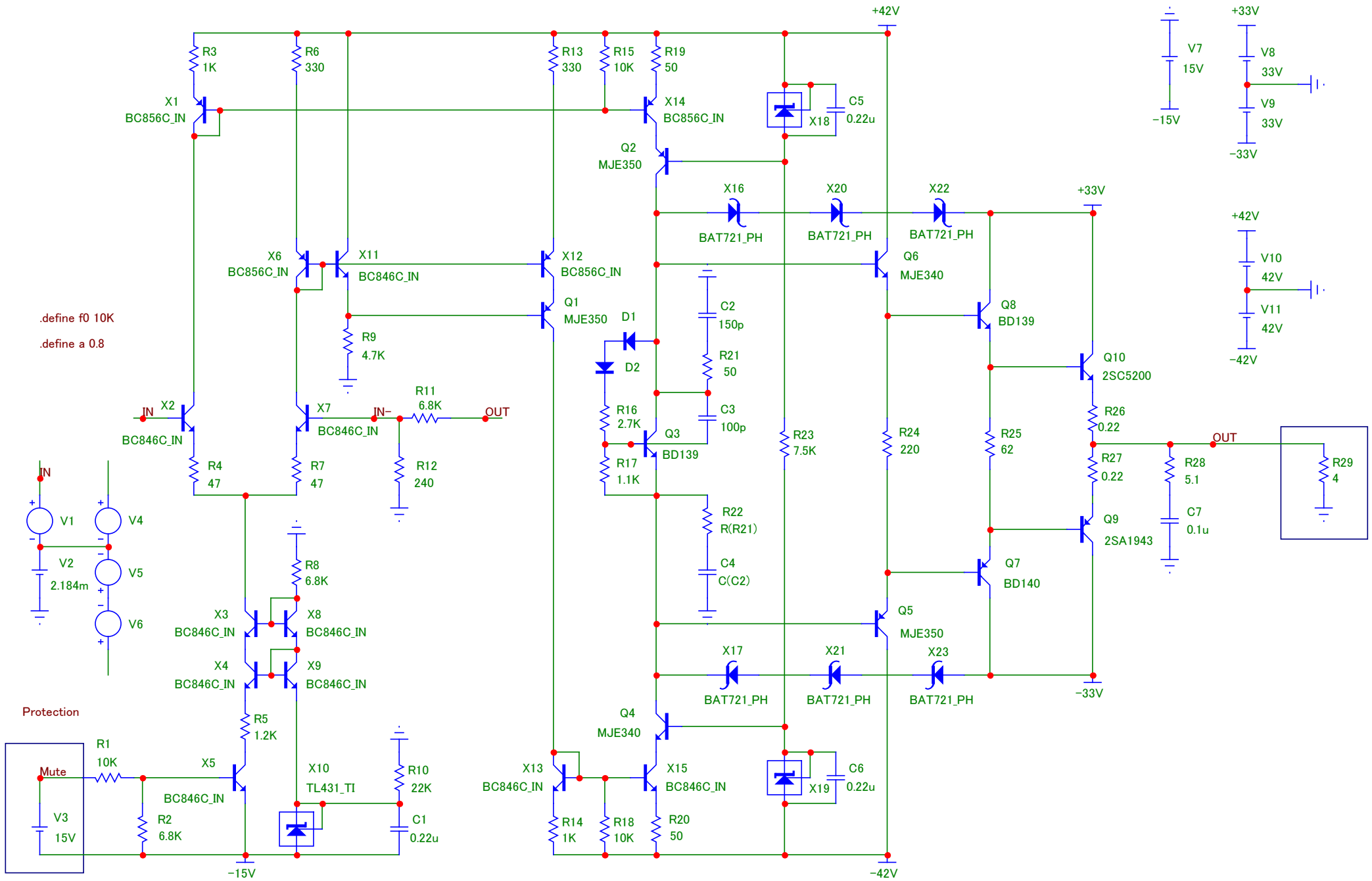
+42V
R3
1K
R6
330
R13
330
R15
10K
R19
50
X1
BC856C_IN
X14
BC856C_IN
X18
C5
0.22u
Q2
MJE350
V7
15V
-15V
+33V
V8
33V
V9
33V
-33V
X16
X20
X22
BAT721_PH
BAT721_PH
BAT721_PH
+33V
+42V
V10
42V
V11
42V
-42V
X6
BC856C_IN
X11
BC846C_IN
X12
BC856C_IN
Q6
MJE340
Q1
MJE350
D1
C2
150p
Q8
BD139
.define f0 10K
.define a 0.8
R9
4.7K
D2
R21
50
Q10
2SC5200
IN
X2
BC846C_IN
X7
BC846C_IN
IN-
R11
6.8K
OUT
R16
2.7K
C3
100p
R26
0.22
Q3
BD139
R23
7.5K
R24
220
R25
62
OUT
R4
47
R7
47
R12
240
R17
1.1K
R27
0.22
R28
5.1
R29
4
IN
V1
V4
R22
R(R21)
Q9
2SA1943
C7
0.1u
V2
2.184m
V5
V6
C4
C(C2)
Q7
BD140
R8
6.8K
X3
BC846C_IN
X8
BC846C_IN
Q5
MJE350
X4
BC846C_IN
X9
BC846C_IN
X17
X21
X23
BAT721_PH
BAT721_PH
BAT721_PH
-33V
Protection
R5
1.2K
Q4
MJE340
R1
10K
Mute
X5
BC846C_IN
X10
TL431_TI
R10
22K
X13
BC846C_IN
X15
BC846C_IN
X19
C6
0.22u
V3
15V
R2
6.8K
C1
0.22u
R14
1K
R18
10K
R20
50
-15V
-42V