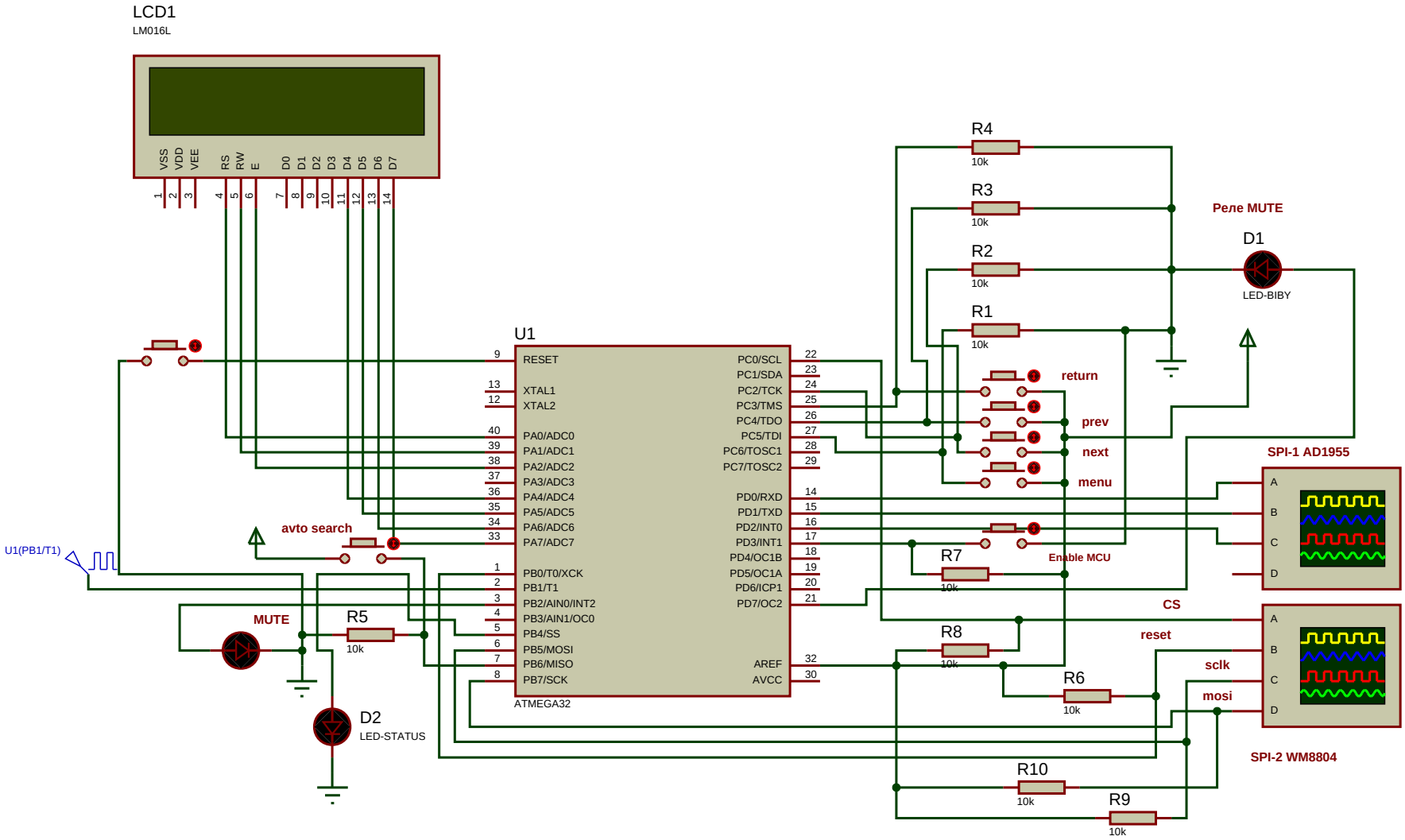
LCD1
LM016L
VSS VDD VEE RS RW E D0 D1 D2 D3 D4 D5 D6 D7
U1
ATMEGA32
RESET
XTAL1
XTAL2
PA0/ADC0
PA1/ADC1
PA2/ADC2
PA3/ADC3
PA4/ADC4
PA5/ADC5
PA6/ADC6
PA7/ADC7
PB0/T0/XCK
PB1/T1
PB2/AIN0/INT2
PB3/AIN1/OC0
PB4/SS
PB5/MOSI
PB6/MISO
PB7/SCK
PC0/SCL
PC1/SDA
PC2/TCK
PC3/TMS
PC4/TDO
PC5/TDI
PC6/TOSC1
PC7/TOSC2
PD0/RXD
PD1/TXD
PD2/INT0
PD3/INT1
PD4/OC1B
PD5/OC1A
PD6/ICP1
PD7/OC2
AREF
AVCC
R1 10k
R2 10k
R3 10k
R4 10k
R5 10k
R6 10k
R7 10k
R8 10k
R9 10k
R10 10k
Реле MUTE
D1
LED-BIBY
return
prev
next
menu
Enable MCU
avto search
U1(PB1/T1)
MUTE
D2
LED-STATUS
SPI-1 AD1955
A B C D
CS
reset
sclk
mosi
SPI-2 WM8804