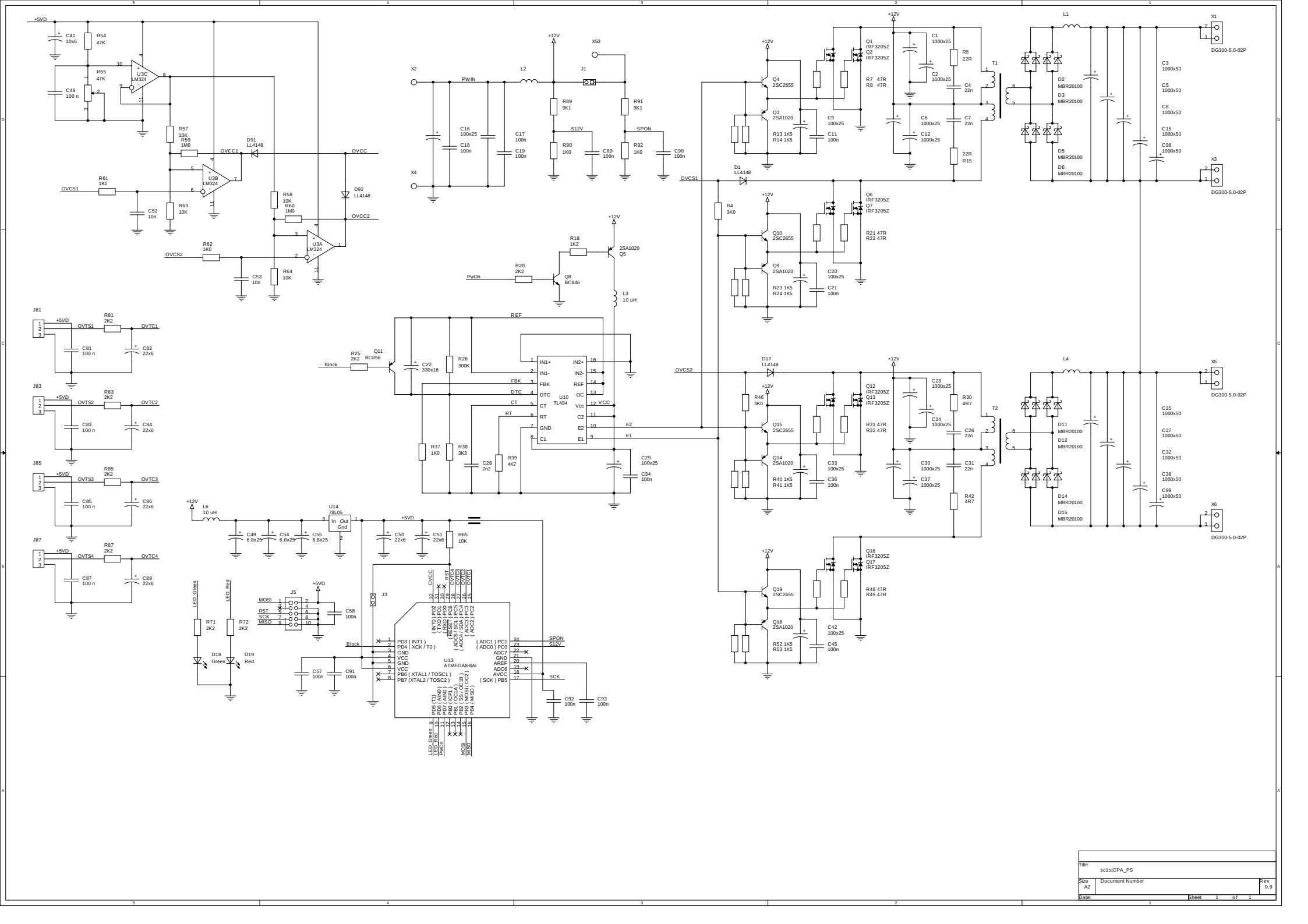
+5VD
C41 10x6
R54 47K
R55 47K
C48 100 n
U3C LM324
R57 10K
R59 1M0
OVCC1
D91 LL4148
OVCC
U3B LM324
R61 1K0
OVCS1
C52 10n
R63 10K
R58 10K
R60 1M0
D92 LL4148
OVCC2
U3A LM324
R62 1K0
OVCS2
C53 10n
R64 10K
X2
X4
PWIN
C16 100x25
C18 100n
C17 100n
C19 100n
L2
+12V
R89 9K1
R90 1K0
S12V
C89 100n
X50
J1
R91 9K1
R92 1K0
SPON
C90 100n
R18 1K2
2SA1020 Q5
R20 2K2
PwOn
Q8 BC846
L3 10 uH
REF
R25 2K2
Q11 BC856
Block
C22 330x16
R26 300K
U10 TL494
IN1+
IN1-
FBK
DTC
CT
RT
GND
C1
IN2+
IN2-
REF
OC
Vcc
C2
E2
E1
VCC
R37 1K0
R38 3K3
C28 2n2
R39 4K7
C29 100x25
C34 100n
J81
R81 2K2
OVTS1
OVTC1
C81 100 n
C82 22x6
J83
R83 2K2
OVTS2
OVTC2
C83 100 n
C84 22x6
J85
R85 2K2
OVTS3
OVTC3
C85 100 n
C86 22x6
J87
R87 2K2
OVTS4
OVTC4
C87 100 n
C88 22x6
L6 10 uH
U14 78L05
In Out Gnd
C49 6.8x25
C54 6.8x25
C55 6.8x25
C50 22x6
C51 22x6
R65 10K
J3
J5
MOSI
RST
SCK
MISO
C58 100n
LED Green
LED Red
R71 2K2
R72 2K2
D18 Green
D19 Red
C57 100n
C91 100n
U13 ATMEGA8-8AI
PD3 (INT1)
PD4 (XCK / T0)
GND
VCC
GND
VCC
PB6 (XTAL1 / TOSC1)
PB7 (XTAL2 / TOSC2)
(ADC1) PC1
(ADC0) PC0
ADC7
GND
AREF
ADC6
AVCC
(SCK) PB5
C92 100n
C93 100n
Q1 IRF3205Z
Q2 IRF3205Z
Q4 2SC2655
Q3 2SA1020
R7 47R
R8 47R
R13 1K5
R14 1K5
C9 100x25
C11 100n
C1 1000x25
C2 1000x25
R5 22R
C4 22n
C6 1000x25
C12 1000x25
C7 22n
22R R15
T1
L1
D2 MBR20100
D3 MBR20100
D5 MBR20100
D6 MBR20100
C3 1000x50
C5 1000x50
C8 1000x50
C15 1000x50
C98 1000x50
X1
X3
DG300-5.0-02P
D1 LL4148
R4 3K0
Q6 IRF3205Z
Q7 IRF3205Z
Q10 2SC2655
Q9 2SA1020
R21 47R
R22 47R
R23 1K5
R24 1K5
C20 100x25
C21 100n
D17 LL4148
R46 3K0
Q12 IRF3205Z
Q13 IRF3205Z
Q15 2SC2655
Q14 2SA1020
R31 47R
R32 47R
R40 1K5
R41 1K5
C33 100x25
C36 100n
C23 1000x25
C24 1000x25
C30 1000x25
C37 1000x25
R30 4R7
C26 22n
C31 22n
R42 4R7
T2
L4
D11 MBR20100
D12 MBR20100
D14 MBR20100
D15 MBR20100
C25 1000x50
C27 1000x50
C32 1000x50
C38 1000x50
C99 1000x50
X5
X6
Q16 IRF3205Z
Q17 IRF3205Z
Q19 2SC2655
Q18 2SA1020
R48 47R
R49 47R
R52 1K5
R53 1K5
C42 100x25
C45 100n
Title
sc1stCPA_PS
Size
A2
Document Number
Rev
0.9
Date:
Sheet 1 of 1