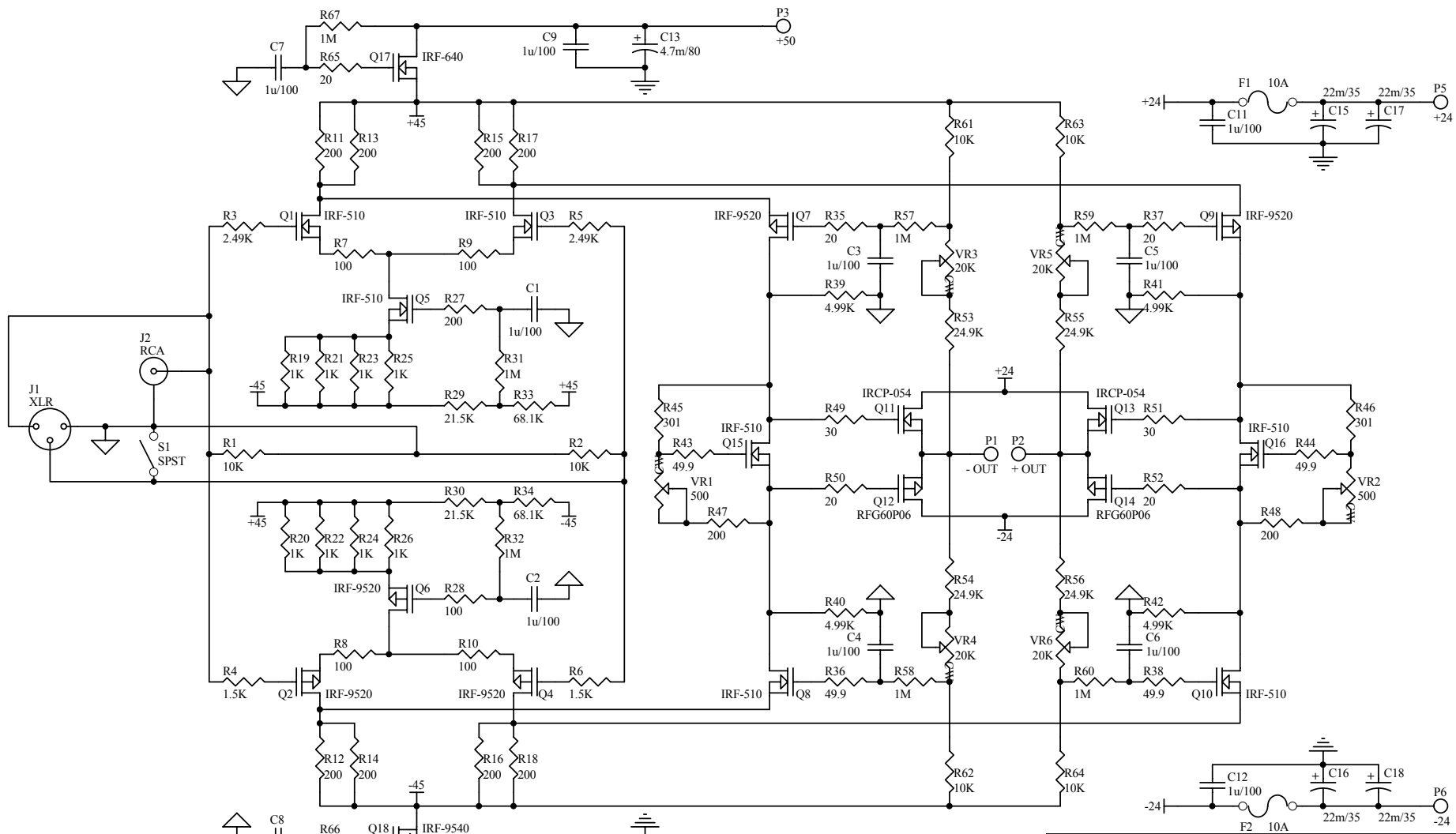
R67 1M
C7 1u/100
R65 20
Q17 IRF-640
C9 1u/100
C13 4.7m/80
P3 +50
+45
R11 200
R13 200
R15 200
R17 200
R61 10K
R63 10K
+24
F1 10A
22m/35
22m/35
P5 +24
C11 1u/100
C15
C17
R3 2.49K
Q1 IRF-510
IRF-510 Q3
R5 2.49K
R7 100
R9 100
IRF-510 Q5
R27 200
C1 1u/100
J2 RCA
J1 XLR
S1 SPST
R19 1K
R21 1K
R23 1K
R25 1K
R31 1M
-45
R29 21.5K
R33 68.1K
+45
R1 10K
R2 10K
R30 21.5K
R34 68.1K
+45
-45
R20 1K
R22 1K
R24 1K
R26 1K
R32 1M
IRF-9520 Q6
R28 100
C2 1u/100
R8 100
R10 100
R4 1.5K
Q2 IRF-9520
IRF-9520 Q4
R6 1.5K
R12 200
R14 200
R16 200
R18 200
-45
C8 1u/100
R66 20
Q18 IRF-9540
R68 1M
C10 1u/100
C14 4.7m/80
P4 -50
IRF-9520 Q7
R35 20
R57 1M
C3 1u/100
VR3 20K
R39 4.99K
R53 24.9K
R59 1M
R37 20
Q9 IRF-9520
VR5 20K
C5 1u/100
R41 4.99K
R55 24.9K
+24
R45 301
IRF-510 Q15
R43 49.9
VR1 500
R47 200
R49 30
IRCP-054 Q11
R50 20
Q12 RFG60P06
P1 - OUT
P2 + OUT
-24
IRCP-054 Q13
R51 30
R52 20
Q14 RFG60P06
IRF-510 Q16
R44 49.9
R46 301
VR2 500
R48 200
R40 4.99K
C4 1u/100
R54 24.9K
VR4 20K
R36 49.9
R58 1M
IRF-510 Q8
R56 24.9K
VR6 20K
R42 4.99K
C6 1u/100
R60 1M
R38 49.9
Q10 IRF-510
R62 10K
R64 10K
C12 1u/100
C16
C18
-24
F2 10A
22m/35
22m/35
P6 -24
Title
Ayre V-3
Size A4
Number
Revision
Date: 25-Feb-2004
Sheet of
File: C:\Documents and Settings\Administrator\Desktop\V3\Audio.ddb
Drawn by: