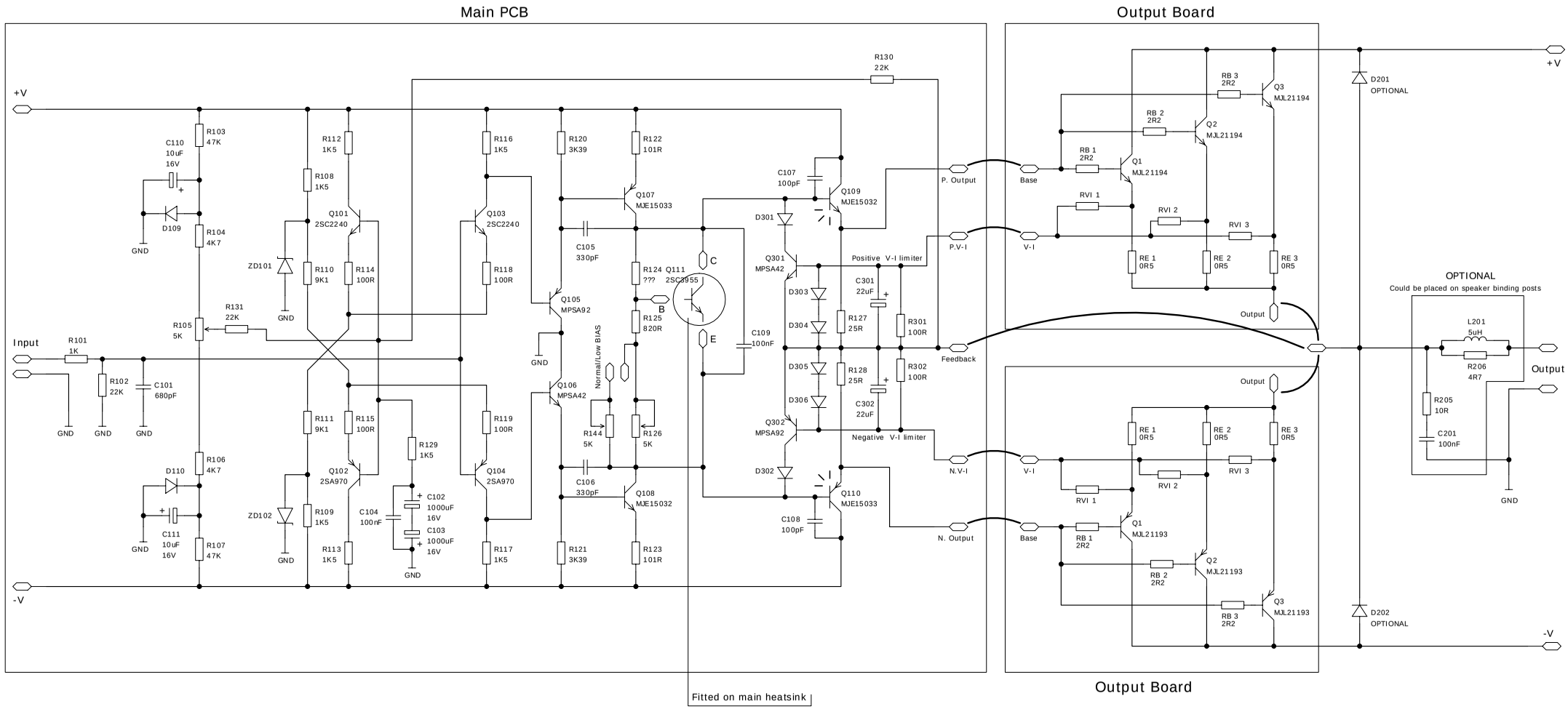


**Notes!**
Components designated 1xx are placed on main PCB
Components designated 2xx are placed on heatsink or speaker binding posts
Components designated 3xx are additional output protection circuits
All capacitors 100V exept where designated otherwise
Q111 must be placed on main heatsink
Q109 and Q110 must be fitted with suitable heatsink
V-I Limiter: 1: (RVI 1 / RVI 2 / RVI 3) = app. 100R for safe SOA

| | | | | | |
|---|---|---|---|---|---|
| Copyright: DELTA AUDIO DENMARK www.delta-audio.com | File Name: Krell-Clone KSA-50.sch | | | | |
| | Date 17.10.2004 Rev. 1.1 | Date 21.10.2004 Rev. 1.2 | Date 21.10.2004 Rev. 1.3 | Date 13.02.2005 Rev. 1.5 | |
| Project: Krell-Clone KSA-50 | Dept. R&D | Drawn by JD | Checked | Released | |
| Circuit Name: Krell KSA-50 Clone | Size A3 | Code UR | Status IP | Sheet 1 of 1 | |