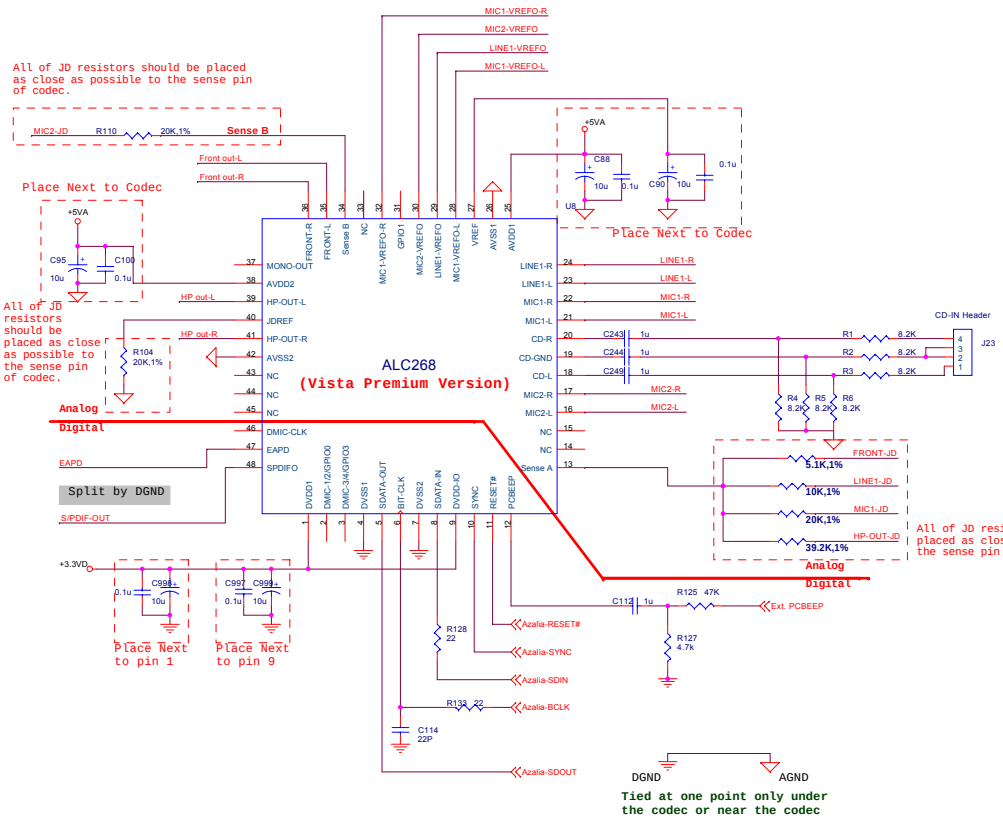

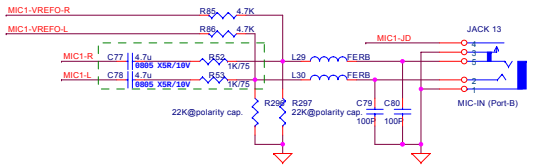

*If use polarity caps., then need to add 22K pull-dwon resistors.

In order to meet Vista Premium requiements, MLCC input cap.It must use X5R dielectric material and 10V DC rated voltage.

*For dedicated input function,please change R52/R53 to 1kΩ for enhancing audio quality and ESD ability.

*For re-tasking function, please change R52/R53 to 75Ω for enhancing audio quality and ESD ability.

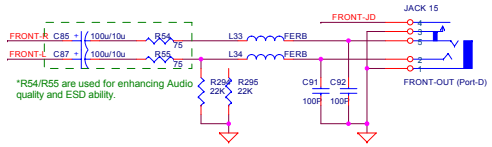

*R54/R55 are used for enhancing Audio quality and ESD ability.

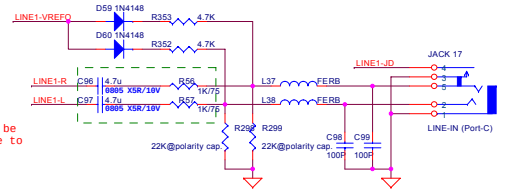

*If use polarity caps., then need to add 22K pull-dwon resistors.

In order to meet Vista Premium requiements, MLCC input cap.It must use X5R dielectric material and 10V DC rated voltage.

*For dedicated input function,please change R56/R57 to 1kΩ for enhancing audio quality and ESD ability.

*For re-tasking function, please change R56/R57 to 75Ω for enhancing audio quality and ESD ability.

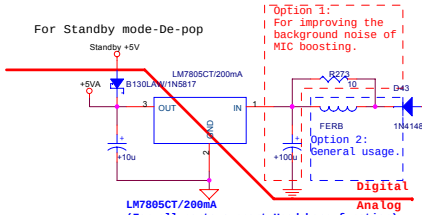

HD Audio Front Panel I/O Module

PORT-F (MIC2) are MIC in, LINE in

PORT-A (HP out) are LINE in and headphone out,don't support MIC.

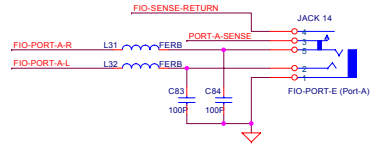

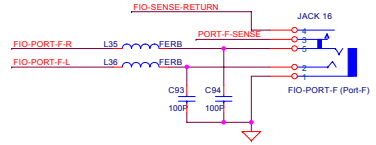

S/PDIF module option 1: Optical

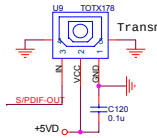

S/PDIF option 2: RCA only

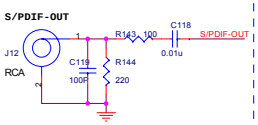

S/PDIF option 3: Optical & RCA

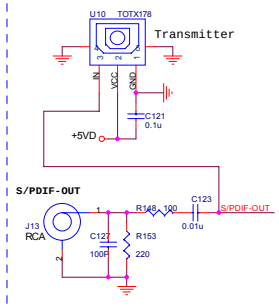

Desktop Configuation for pure ALC268: (2 Channel Solution)

Rear Panel: 3 jacks have specific functionality

Front Panel: 2 jacks are specific functionality

Pin Assignment	Location	Function
LINE-OUT (pin-35/36)	Back Panel	Line out / headphone out / line-in
LINE1 (pin-23/24)	Back Panel	Line in / mic-in / line-out w/o amplifier
MIC1 (pin-21/22)	Back Panel	Mic-in / line in / line-out w/o amplifier
HP-OUT (pin-39/41)	Front Panel	Headphone out / line out / Line-in
MIC2 (pin-16/17)	Front Panel	Mic-in / line-in

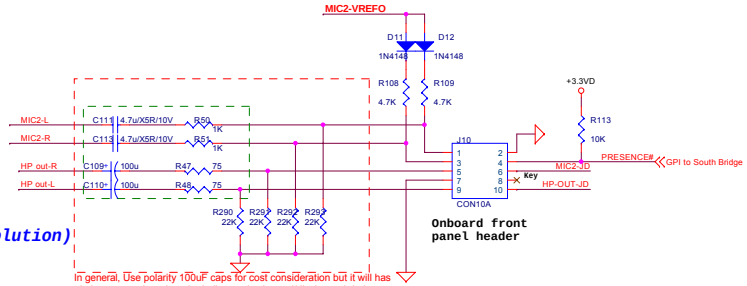

In general, Use polarity 100uF caps for cost consideration but it will has obvious pop noise when the bulk caps is charged/discharged during startup and shutdown. Add 22K pull-down resistors will effective to improve the pop noise.

*R47/R48/R50/R51 are used for enhancing Audio quality and ESD ability.

Realtek Semiconductor, Crop.		
Title: ALC268		
Size	Document Number: **Desktop Config. (3+2 Solution)**	Rev. 0.55
Date: Monday, June 18, 2007	Sheet 1 of 2	

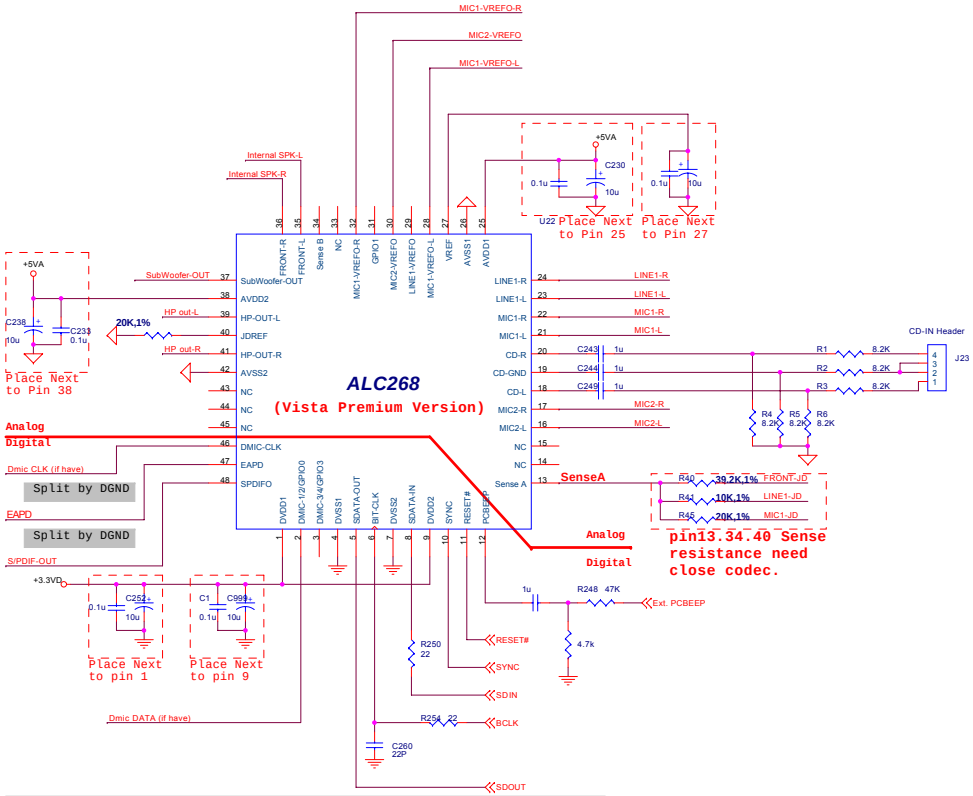

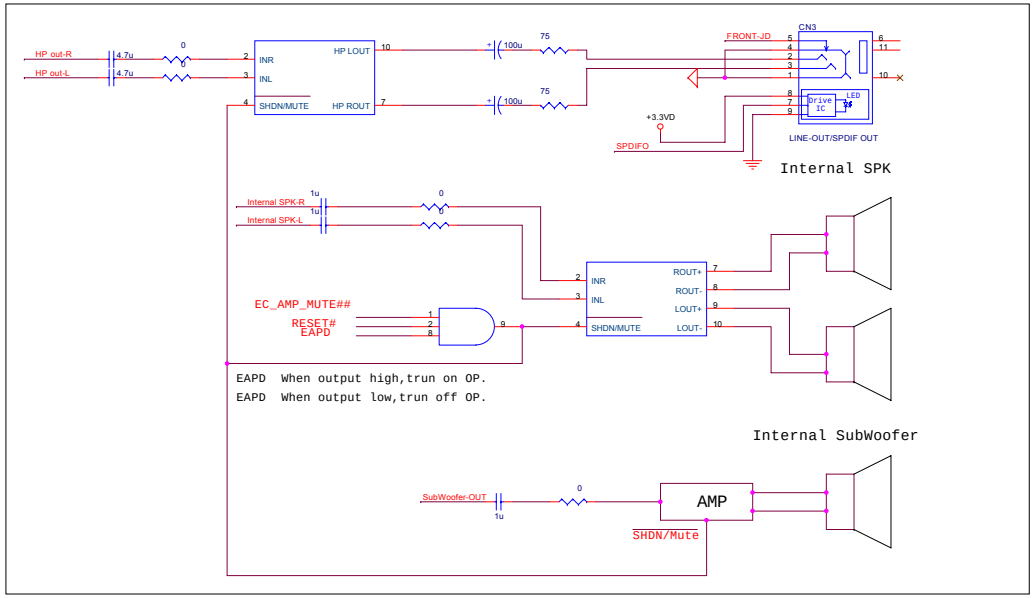

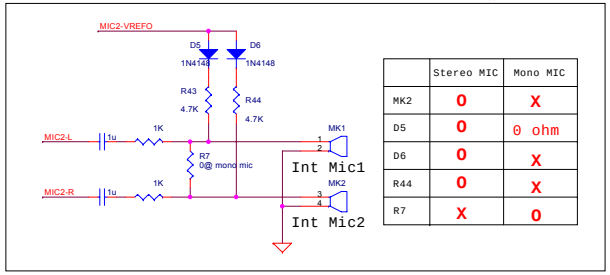

	Stereo MIC	Mono MIC
MK2	O	X
D5	O	0 ohm
D6	O	X
R44	O	X
R7	X	O

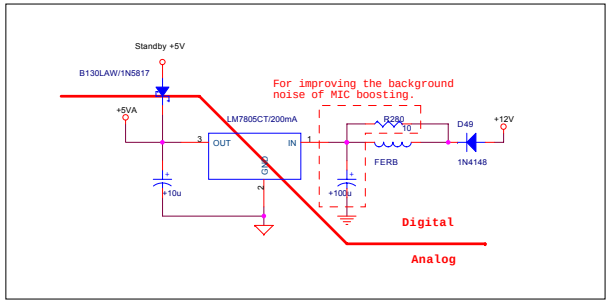

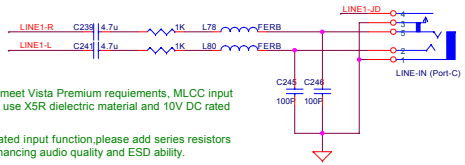

In order to meet Vista Premium requiements, MLCC input cap.It must use X5R dielectric material and 10V DC rated voltage.

*For dedicated input function,please add series resistors 1kΩ for enhancing audio quality and ESD ability.

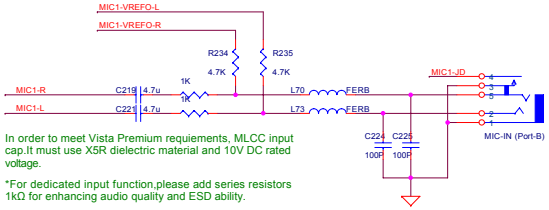

In order to meet Vista Premium requiements, MLCC input cap.It must use X5R dielectric material and 10V DC rated voltage.

*For dedicated input function,please add series resistors 1kΩ for enhancing audio quality and ESD ability.

PhoneJacks are all normally open type.

DGND AGND

Tied at one point only under the codec or near the codec

Mobile Configuation for pure ALC268: (2 Channel Solution)

3 external jacks (Line-in / Mic-in / Hp-out + Spdif out combo) / internal speaker / internal subwoofer / internal mic(digital or analog mic supporting)

Pin Assignment	Location	Function
LINE-OUT (pin-35/36)	External	Headphone out w/ amplifier
HP-OUT (pin-39/41)	Internal	Internal Speaker
LINE1 (pin-23/24)	External	Line in
MIC1 (pin-21/22)	External	Mic in
MONO-OUT (pin-37)	Internal	Internal Subwoofer
MIC2 (pin-16/17)	Internal	Internal Mic (Analog MIC)

Realtek Semiconductor, Crop.

Title: ALC268 Mobile Configuration

Size | Document Number | Rev 0.55

Date: Wednesday, April 16, 2008 Sheet 2 of 2