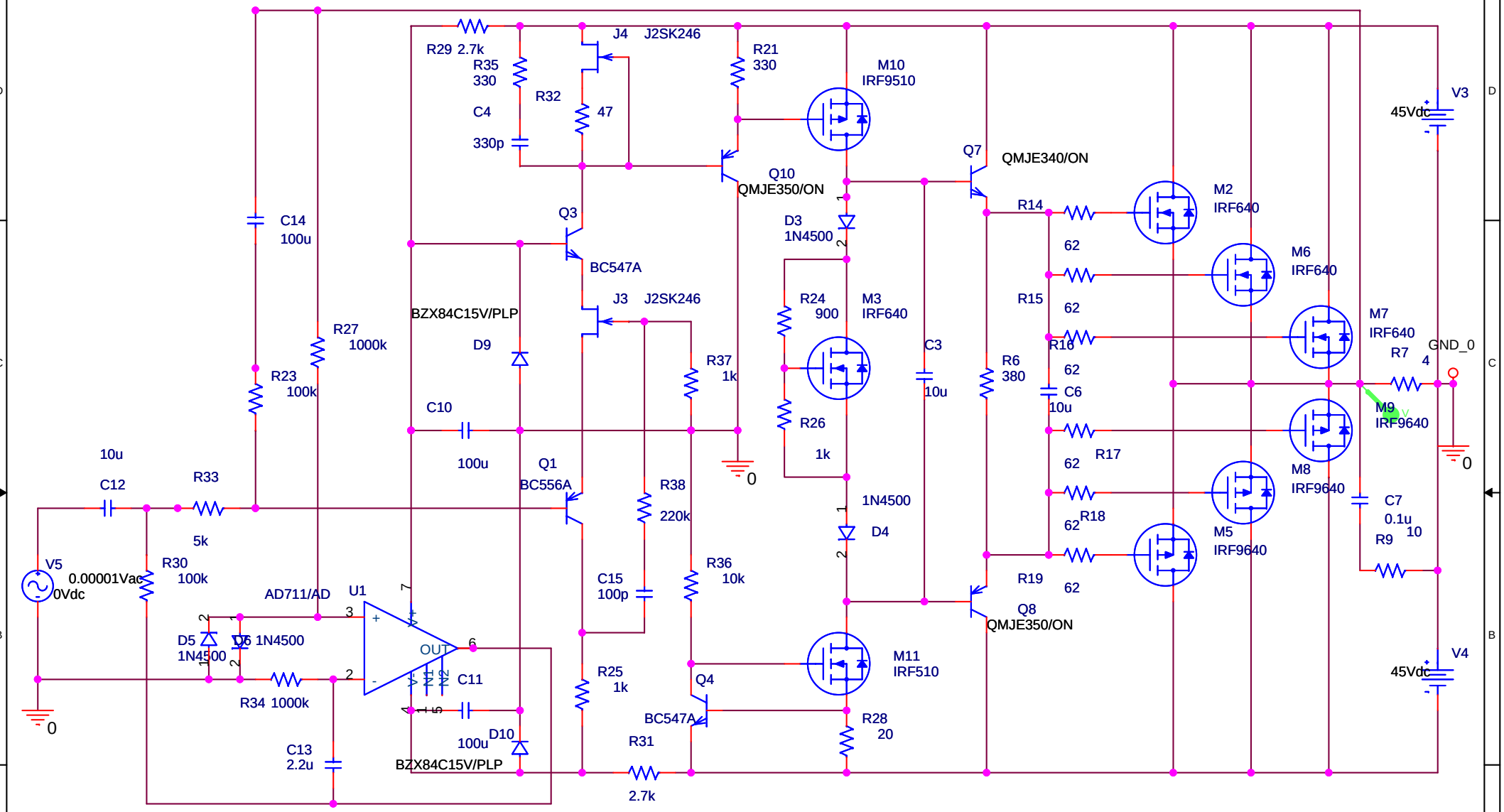

Title

Power amplifier "Kayman I"

Size	Document Number	Rev
A		1.1

Date: Tuesday, May 26, 2009 Sheet 1 of 1