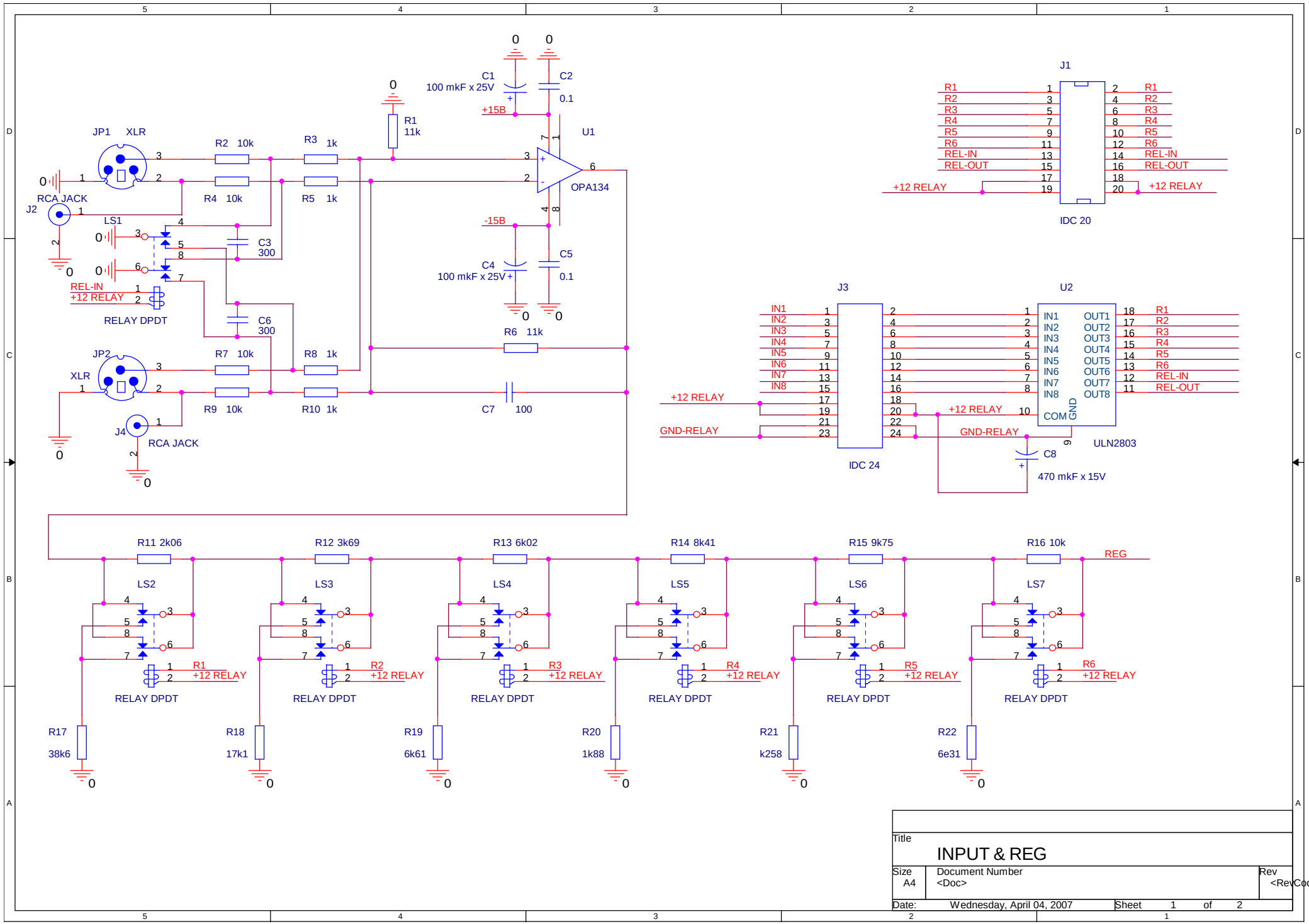

Title
INPUT & REG

Size A4 | Document Number <Doc> | Rev <RevCode>

Date: Wednesday, April 04, 2007 | Sheet 1 of 2