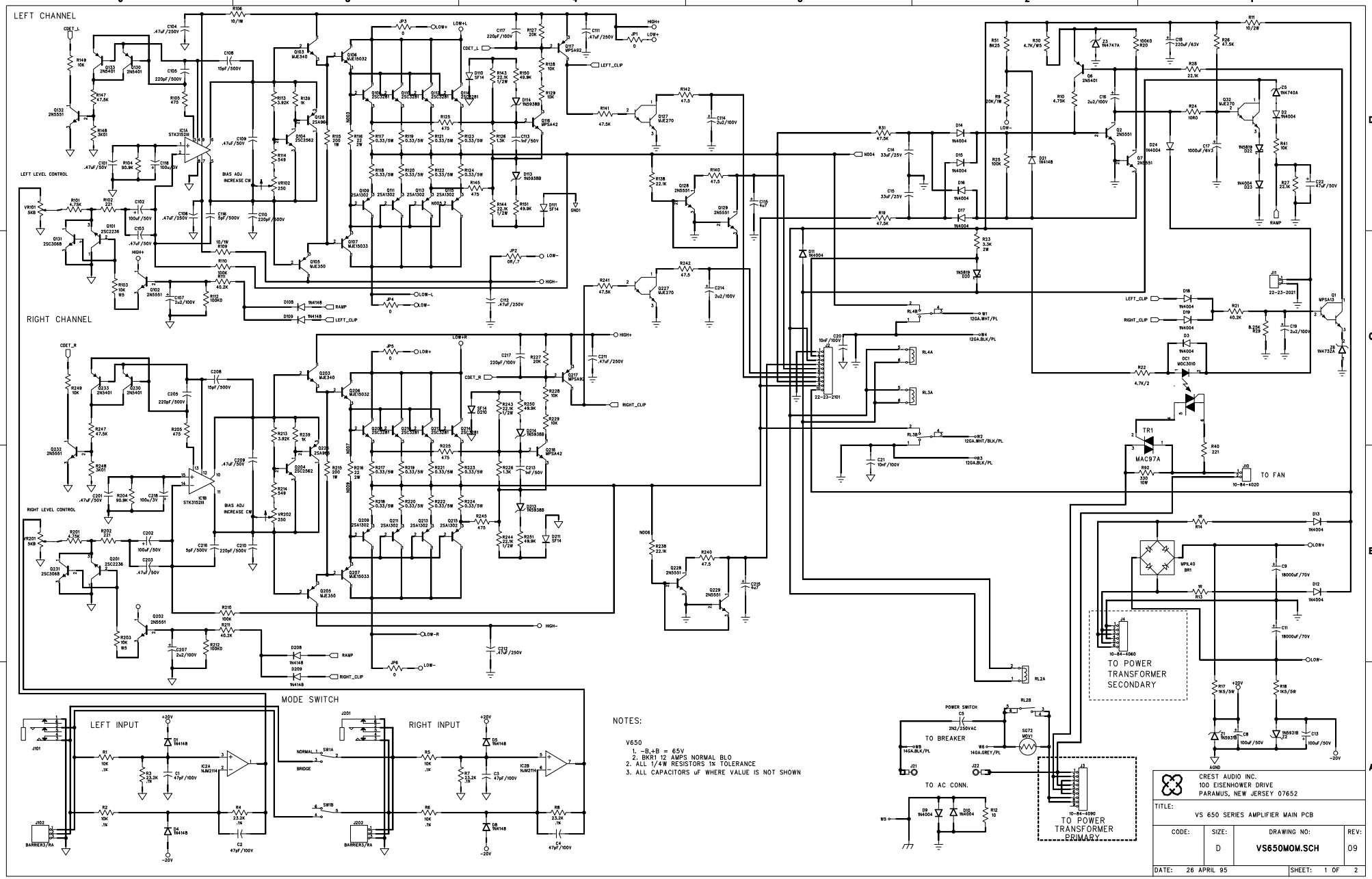
LEFT CHANNEL
RIGHT CHANNEL
LEFT LEVEL CONTROL
RIGHT LEVEL CONTROL
BIAS ADJ INCREASE CW
MODE SWITCH
LEFT INPUT
RIGHT INPUT
NOTES:
V650
1. -B,+B = 65V
2. BKR1 12 AMPS NORMAL BLO
2. ALL 1/4W RESISTORS 1% TOLERANCE
3. ALL CAPACITORS uF WHERE VALUE IS NOT SHOWN
TO BREAKER
TO AC CONN.
TO POWER TRANSFORMER SECONDARY
TO POWER TRANSFORMER PRIMARY
TO FAN
CREST AUDIO INC.
100 EISENHOWER DRIVE
PARAMUS, NEW JERSEY 07652
TITLE:
VS 650 SERIES AMPLIFIER MAIN PCB
CODE:
SIZE: D
DRAWING NO: VS650MOM.SCH
REV: 09
DATE: 26 APRIL 95
SHEET: 1 OF 2