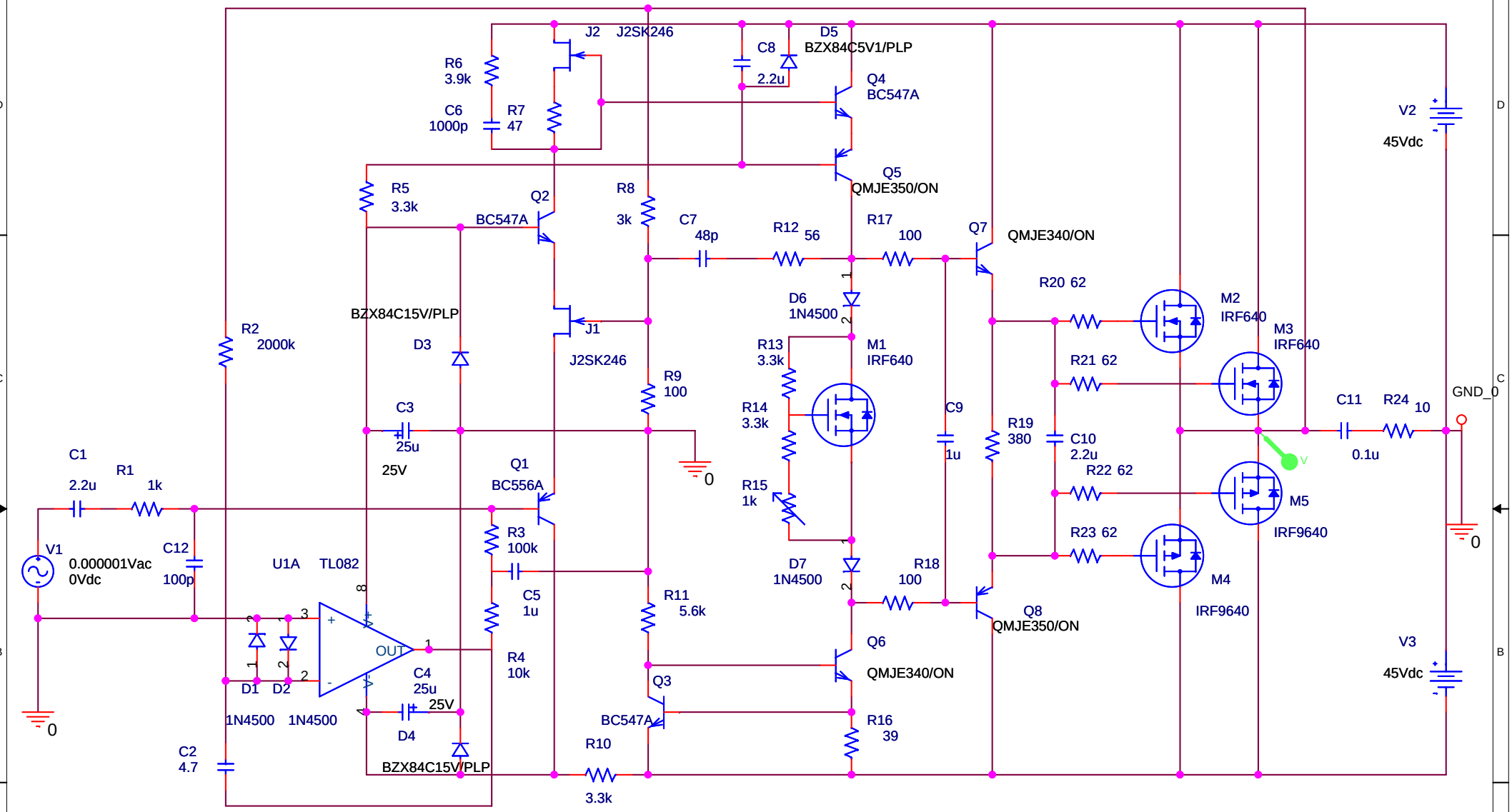

Title	Power amplifier "Cayman I"	
Size A	Document Number	Rev 2.0
Date: Friday, May 22, 2009	Sheet 1 of 1	