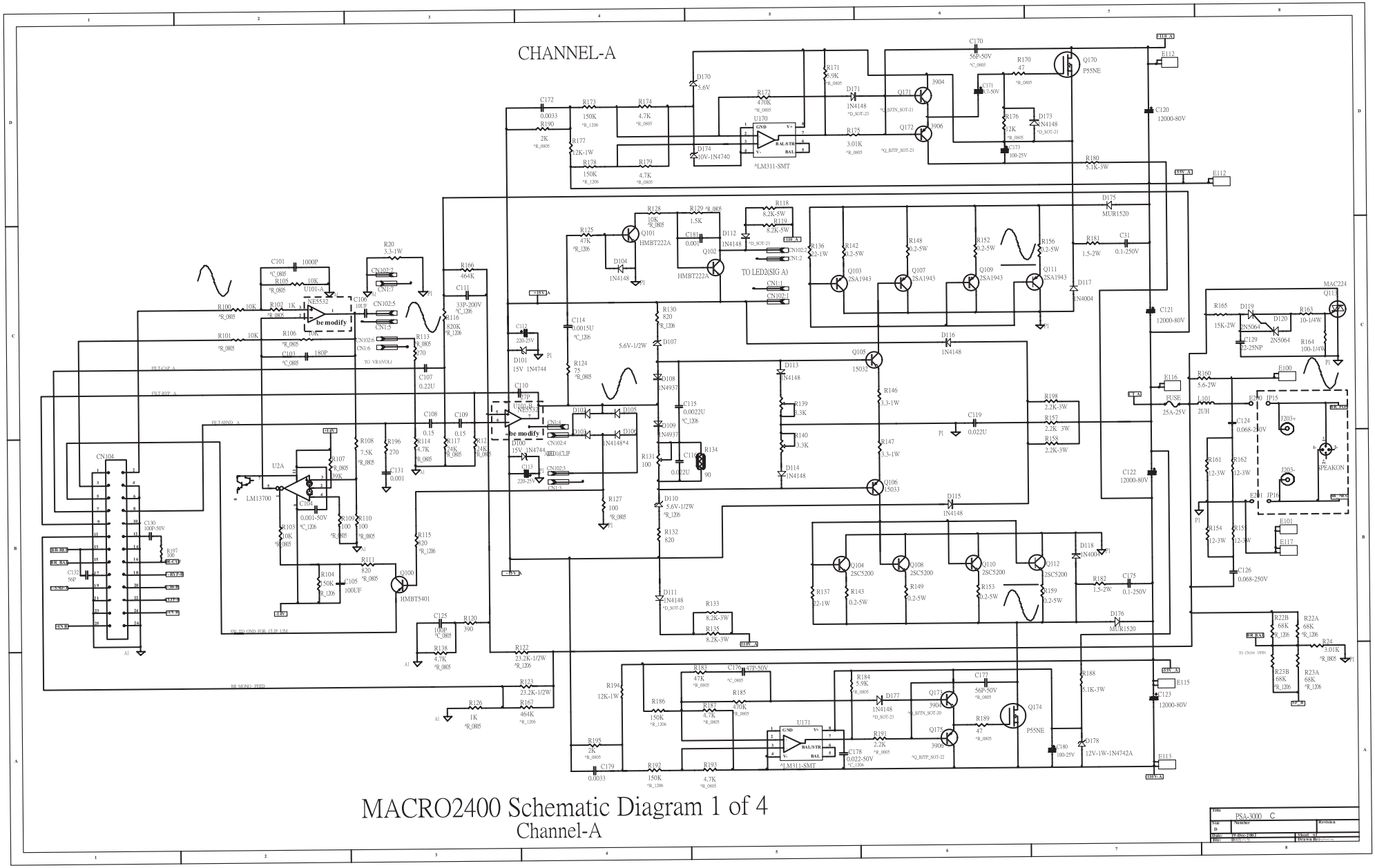

MACRO2400 Schematic Diagram 1 of 4
Channel-A

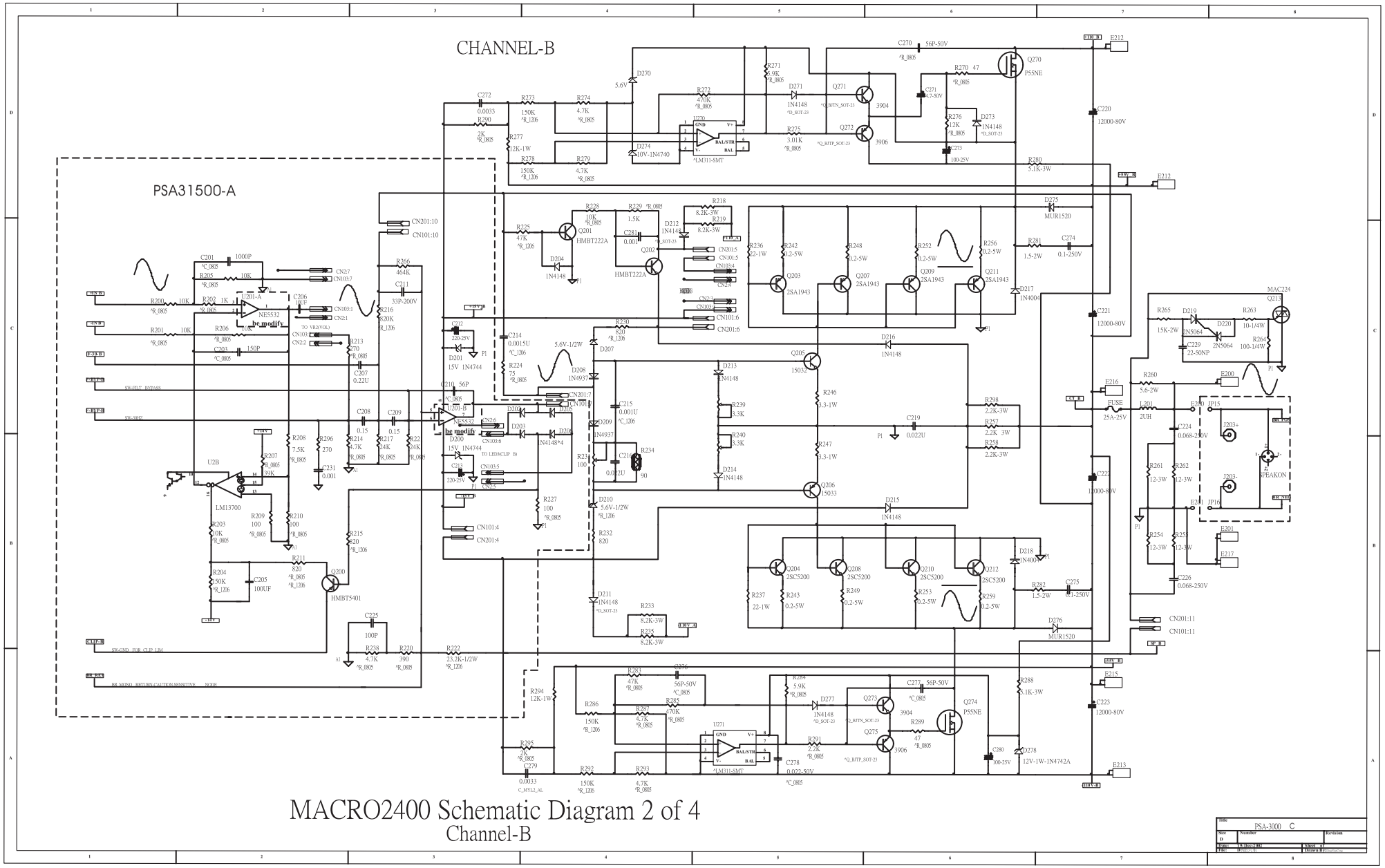
CHANNEL-B
PSA31500-A
MACRO2400 Schematic Diagram 2 of 4
Channel-B
PSA-3000 C

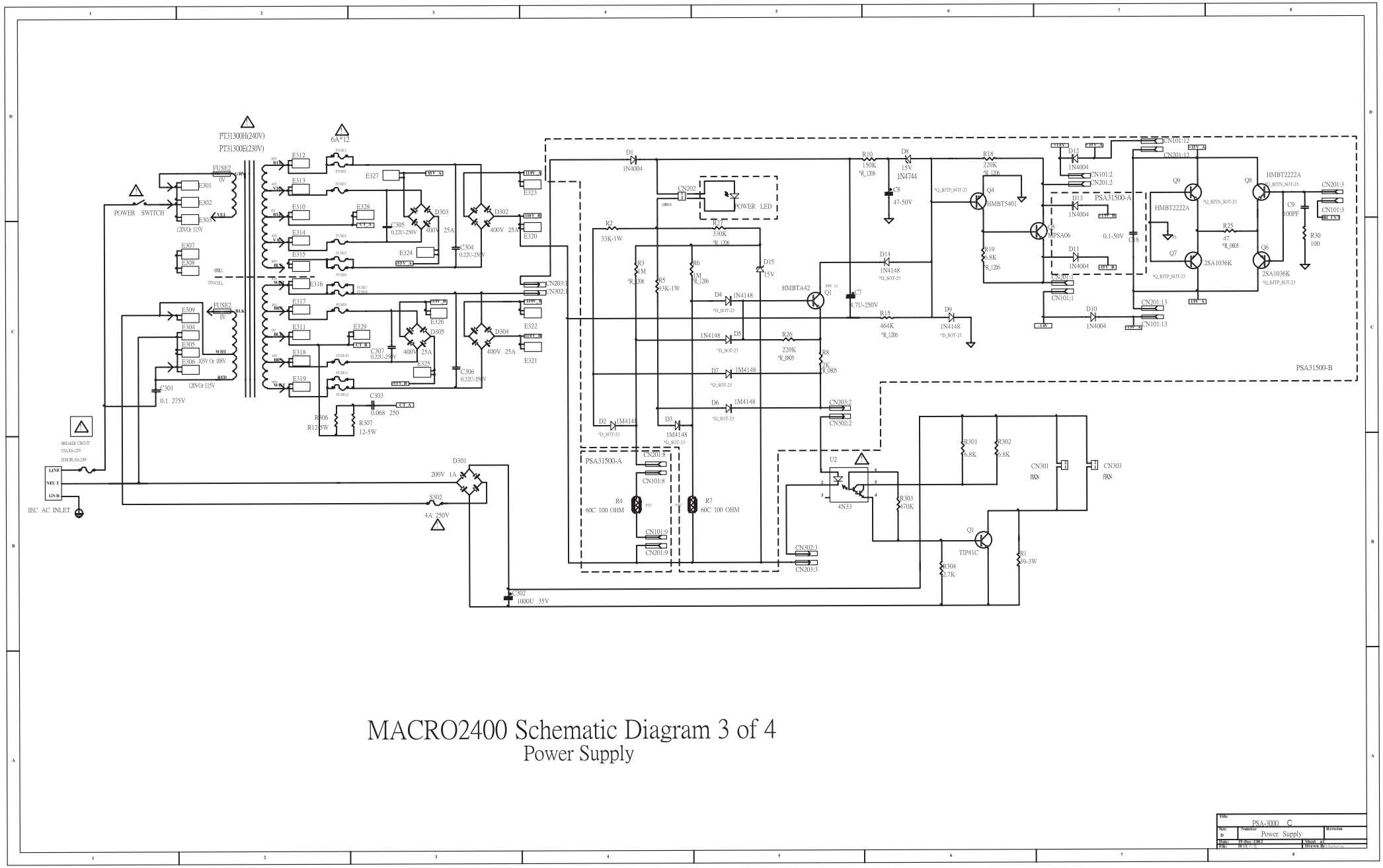

MACRO2400 Schematic Diagram 3 of 4

Power Supply

Title	PSA-3000 C		
Size D	Number	Power Supply	Revision
Date:	11-Dec-2002	Sheet 4 of	
File:	18-01.sch	Drawn By:	