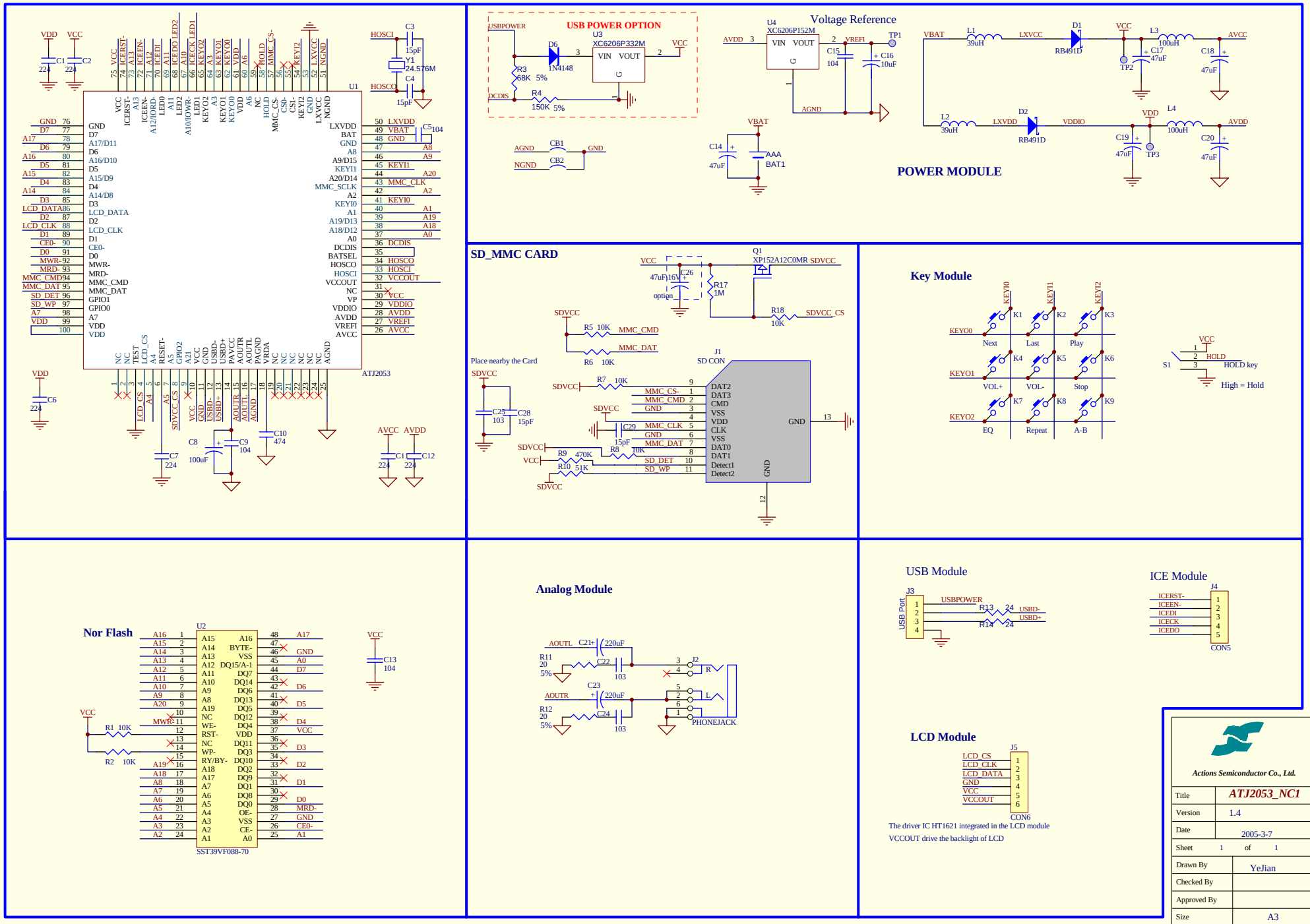
USB POWER OPTION
Voltage Reference
POWER MODULE
SD_MMC CARD
Key Module
Nor Flash
Analog Module
USB Module
ICE Module
LCD Module
ATJ2053
SST39VF088-70
SD CON
USB Port
CON5
CON6
PHONEJACK
Actions Semiconductor Co., Ltd.
Title ATJ2053_NC1
Version 1.4
Date 2005-3-7
Sheet 1 of 1
Drawn By YeJian
Checked By
Approved By
Size A3
The driver IC HT1621 integrated in the LCD module
VCCOUT drive the backlight of LCD