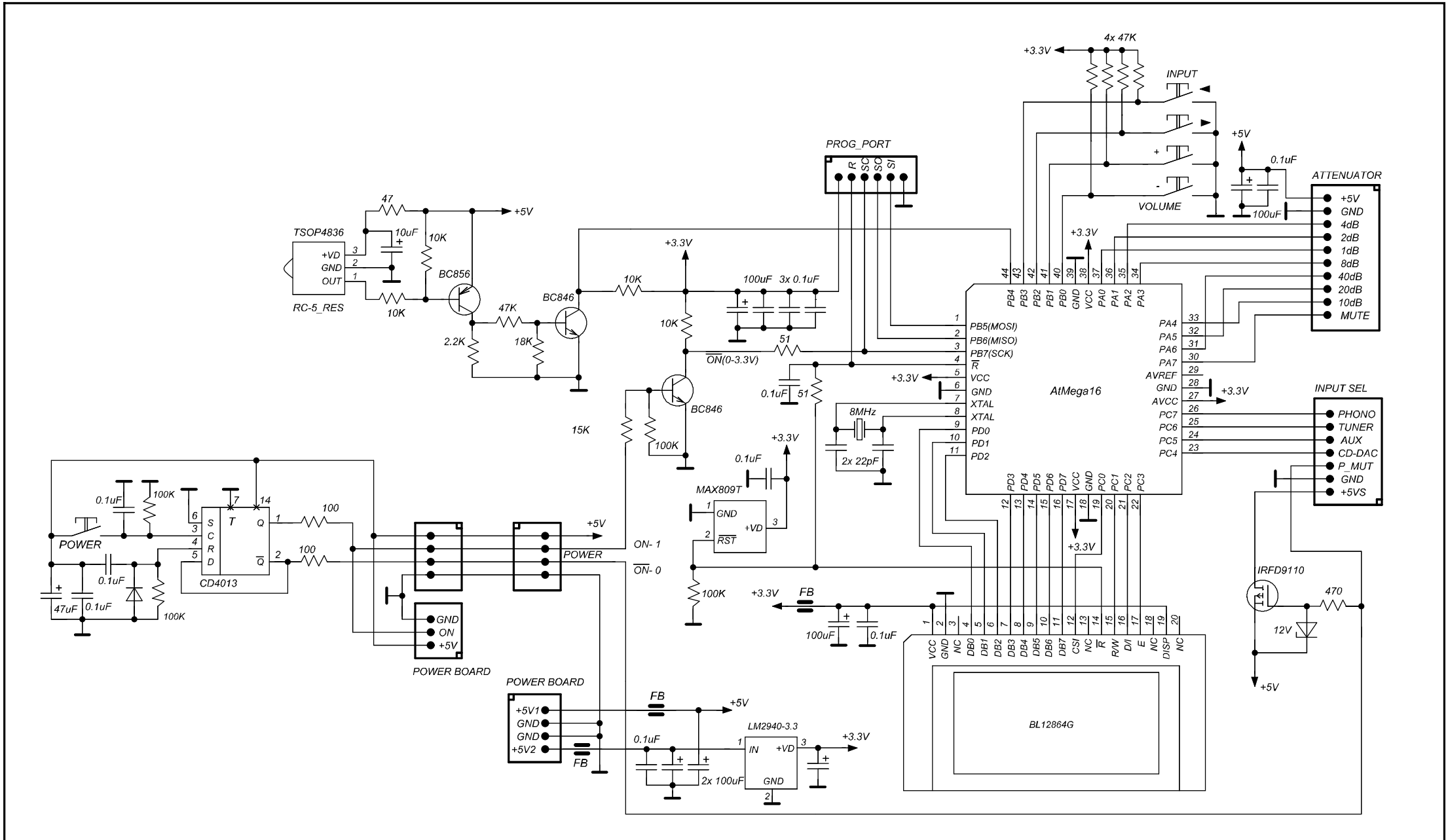

CONTROL BOARD

VD-TWO 2007