P1 CONNECTS TO A4J9
P2 CONNECTS TO A4J10
P3 CONNECTS TO A4J1
P4 CONNECTS TO A4J2

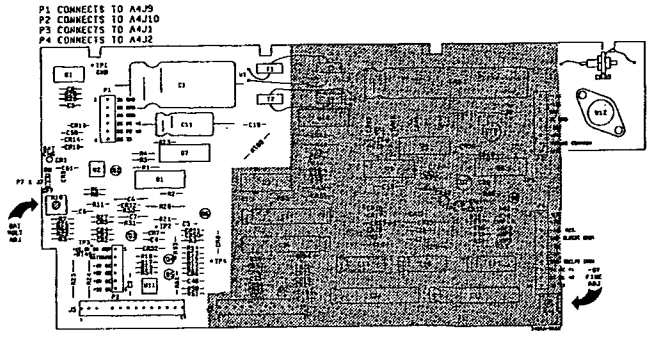

A16
03497-66510

NOTE

Unshaded area shown on this schematic.

A16 Power Supply

Regulator IC's	Type	Input	Output	Qtyd	Adj.
U1	MC1723L Voltage Regulator			2	
U3	LM320T-15 3-Terminal Pos. Regulator (+15V)	1	2	3	
U4	UA7815UC 3-Terminal Reg. Regulator (+15V)				
U6,U10	MC7915C 3-Terminal Reg. Regulator (-15V)	3	2	1	
U9	LM317T 3-Terminal Adj. Regulator	2	3		1
U12	LM323K +5V Pos. Regulator	1	2	Vmax	
Op Amp IC's	Type	+V	-V	Qtyd.	
U2	LM358N	Bt=12.5V)		4	
U7	LM301AN	7(+15V)	4(-15V)	4	
U11	LM358N	Bt=5V)		4	

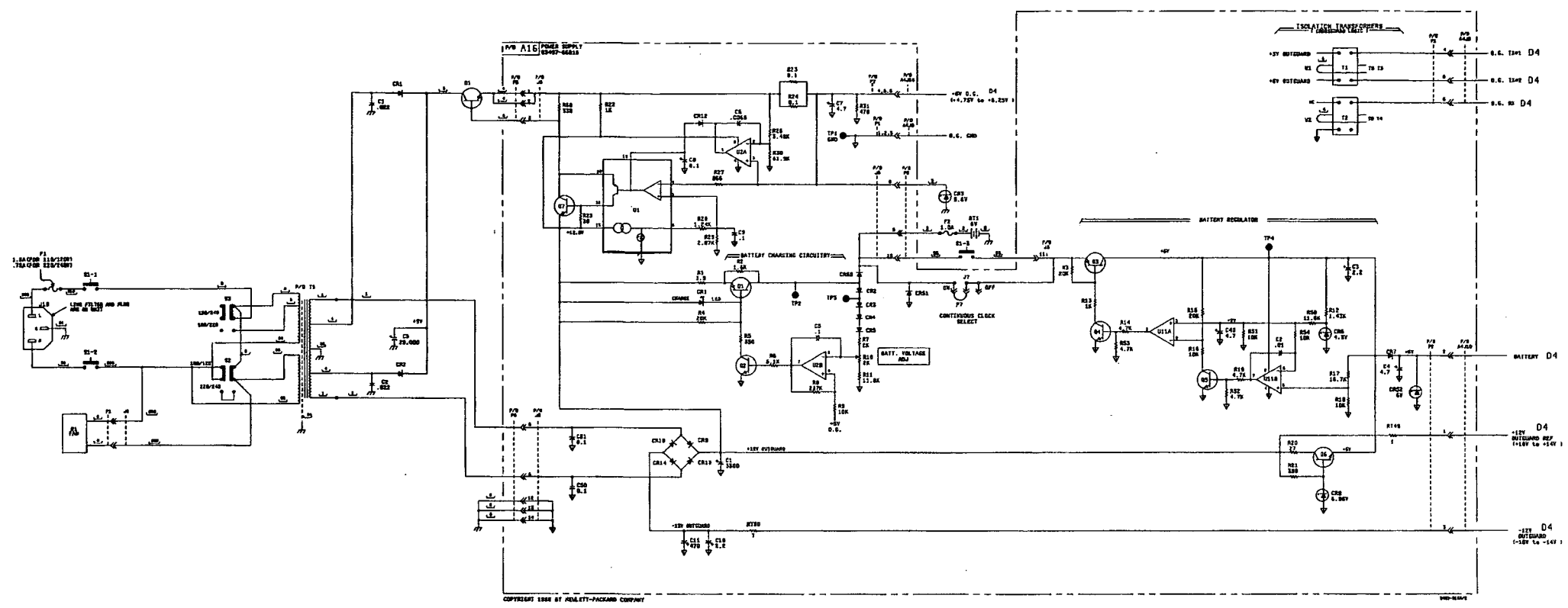

Figure 8-E-20. Outguard Power Supplies (Schematic D2)