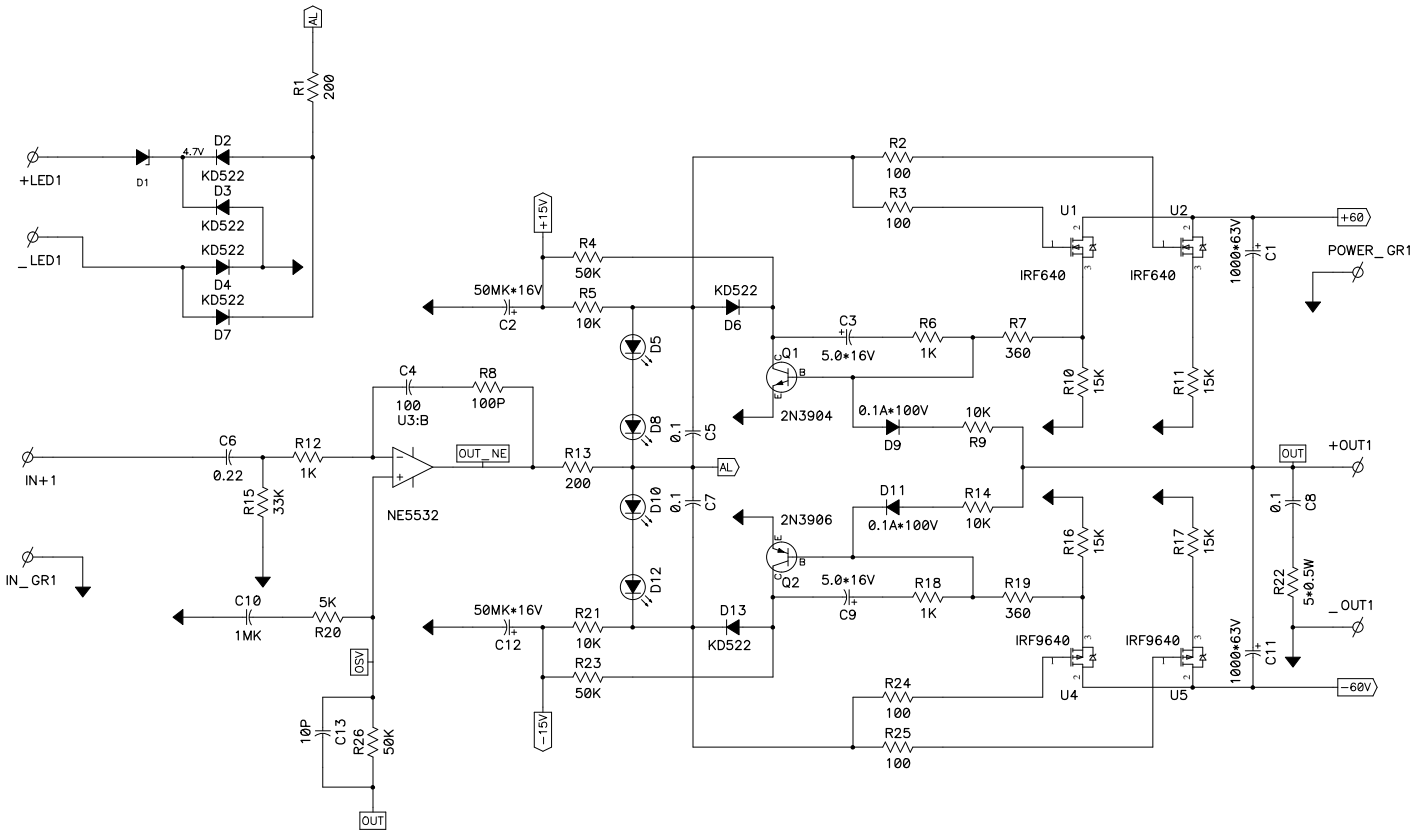

Title	*Усилител 150Вт. 8ом.*	
Size A2	Number *D-2*	Rev
Date *Sun Jan 07, 2007*	Drawn by *Корольков.А.В.*	
Filename	Sheet of	