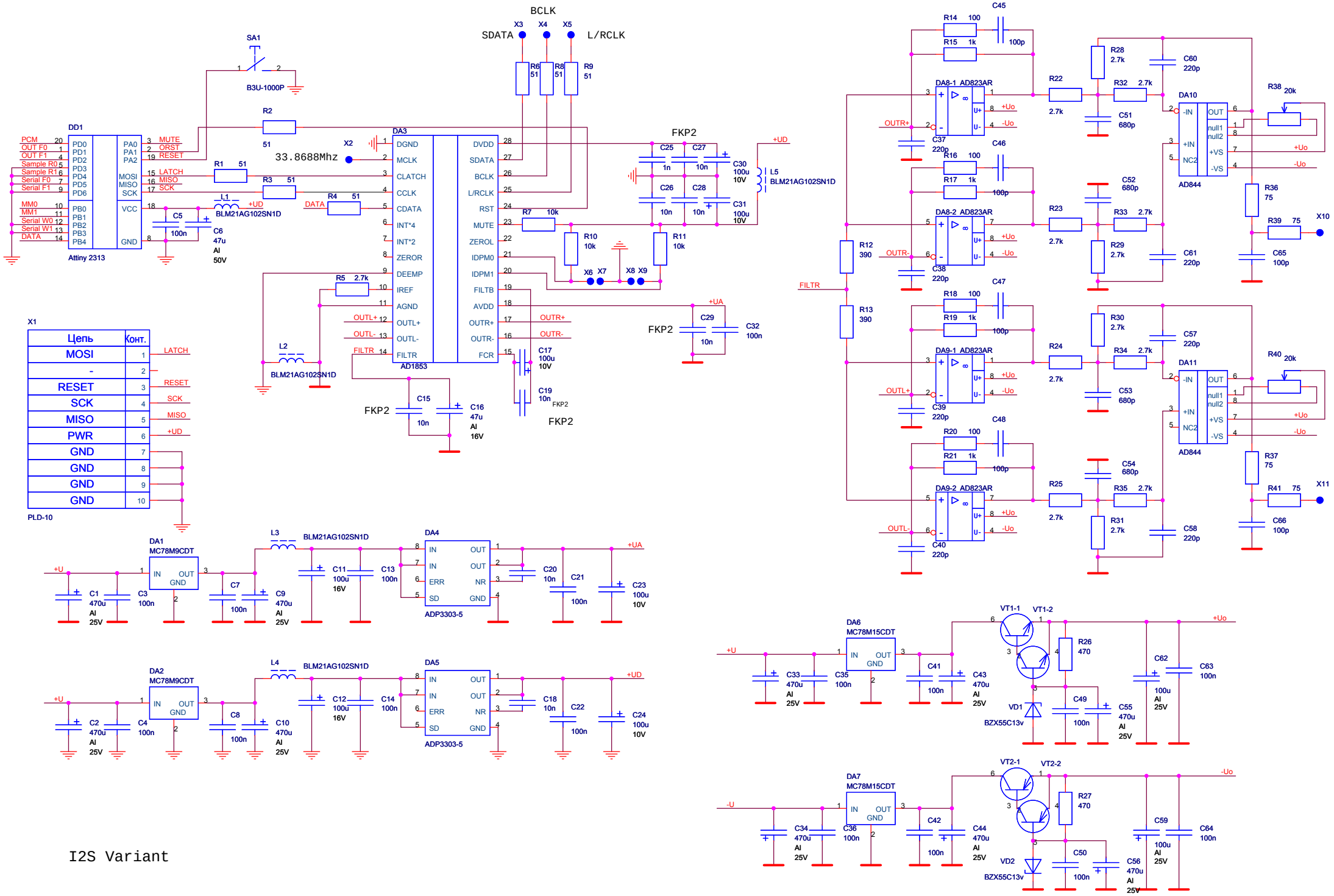
BCLK
SDATA
L/RCLK
X3
X4
X5
SA1
B3U-1000P
DD1
Attiny 2313
PCM
OUT F0
OUT F1
Sample R0
Sample R1
Serial F0
Serial F1
MM0
MM1
Serial W0
Serial W1
DATA
MUTE
ORST
RESET
LATCH
MISO
SCK
+UD
R2
51
R1 51
R3 51
R4 51
R5 2.7k
R6 51
R8 51
R9 51
R7 10k
R10 10k
R11 10k
X2
33.8688Mhz
L1
BLM21AG102SN1D
C5
100n
C6
47u
Al
50V
DA3
AD1853
DGND
MCLK
CLATCH
CCLK
CDATA
INT*4
INT*2
ZEROR
DEEMP
IREF
AGND
OUTL+
OUTL-
FILTR
DVDD
SDATA
BCLK
L/RCLK
RST
MUTE
ZEROL
IDPM0
IDPM1
FILTB
AVDD
OUTR+
OUTR-
FCR
X6
X7
X8
X9
FKP2
C25 1n
C27 10n
C26 10n
C28 10n
C30 100u 10V
C31 100u 10V
L5
BLM21AG102SN1D
+UA
C29 10n
C32 100n
C17 100u 10V
C19 10n
C15 10n
C16 47u Al 16V
L2
BLM21AG102SN1D
X1
Цепь
Конт.
MOSI
-
RESET
SCK
MISO
PWR
GND
GND
GND
GND
PLD-10
DA1
MC78M9CDT
IN
OUT
GND
+U
C1 470u Al 25V
C3 100n
C7 100n
C9 470u Al 25V
L3
BLM21AG102SN1D
C11 100u 16V
C13 100n
DA4
ADP3303-5
ERR
SD
NR
C20 10n
C21 100n
C23 100u 10V
DA2
MC78M9CDT
C2 470u Al 25V
C4 100n
C8 100n
C10 470u Al 25V
L4
BLM21AG102SN1D
C12 100u 16V
C14 100n
DA5
ADP3303-5
C18 10n
C22 100n
C24 100u 10V
R14 100
R15 1k
C45 100p
R16 100
R17 1k
C46 100p
R18 100
R19 1k
C47 100p
R20 100
R21 1k
C48 100p
DA8-1 AD823AR
DA8-2 AD823AR
DA9-1 AD823AR
DA9-2 AD823AR
OUTR+
OUTR-
OUTL+
OUTL-
C37 220p
C38 220p
C39 220p
C40 220p
R12 390
R13 390
FILTR
R22 2.7k
R23 2.7k
R24 2.7k
R25 2.7k
R28 2.7k
R32 2.7k
R29 2.7k
R33 2.7k
R30 2.7k
R34 2.7k
R31 2.7k
R35 2.7k
C51 680p
C52 680p
C53 680p
C54 680p
C60 220p
C61 220p
C57 220p
C58 220p
DA10
DA11
AD844
-IN
+IN
NC2
OUT
null1
null2
+VS
-VS
R38 20k
R36 75
R39 75
X10
R40 20k
R37 75
R41 75
X11
C65 100p
C66 100p
+Uo
-Uo
DA6
MC78M15CDT
C33 470u Al 25V
C35 100n
C41 100n
C43 470u Al 25V
VT1-1
VT1-2
R26 470
VD1
BZX55C13v
C49 100n
C55 470u Al 25V
C62 100u Al 25V
C63 100n
DA7
MC78M15CDT
-U
C34 470u Al 25V
C36 100n
C42 100n
C44 470u Al 25V
VT2-1
VT2-2
R27 470
VD2
BZX55C13v
C50 100n
C56 470u Al 25V
C59 100u Al 25V
C64 100n

I2S Variant