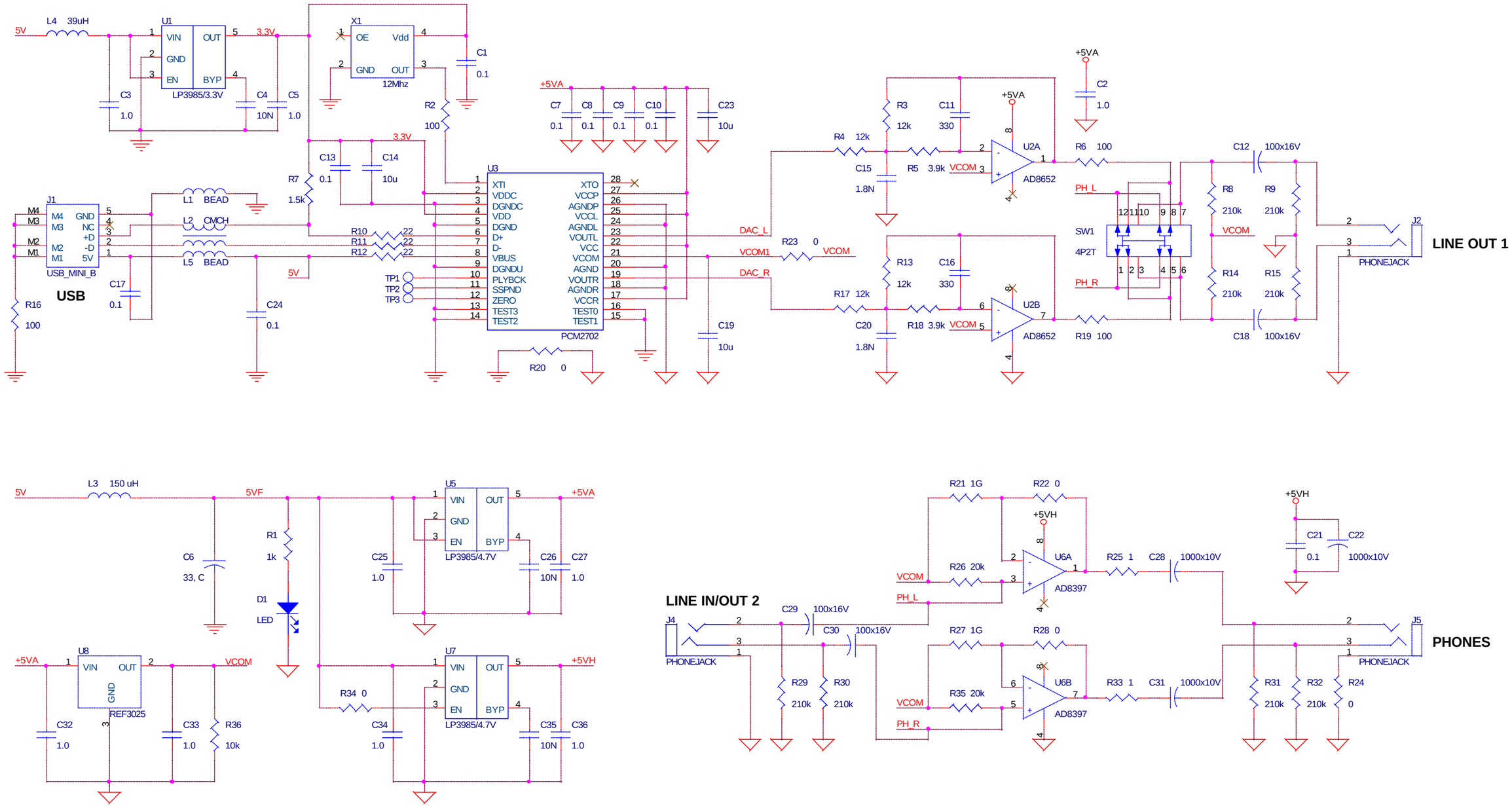

Title	**USB SOUNDCARD**	
Size B	Document Number **PCM2702**	Rev **1**
Date: Sunday, January 13, 2008	Sheet 1 of 1	