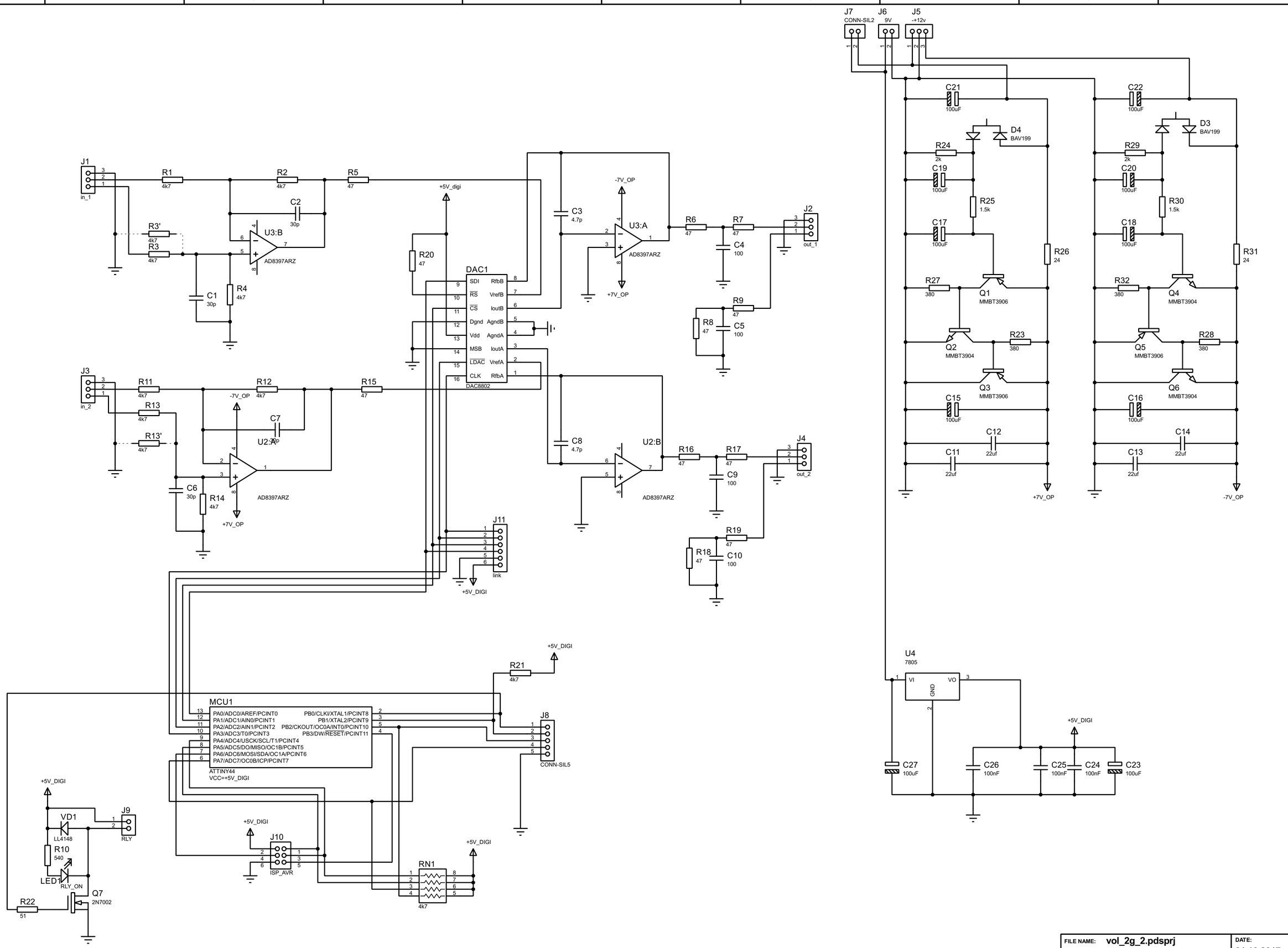

FILE NAME: vol_2g_2.pdsprj	DATE: 31.10.2017
DESIGN TITLE: volume	PAGE: 1 of 1
PATH: N:\project(dell)\project\volumeII\vol_2g_2.pdsprj	
BY: wired REV: 1	TIME: 22:02:59